RCE Series Compressor Refrigerator

Installation and Operating Manual

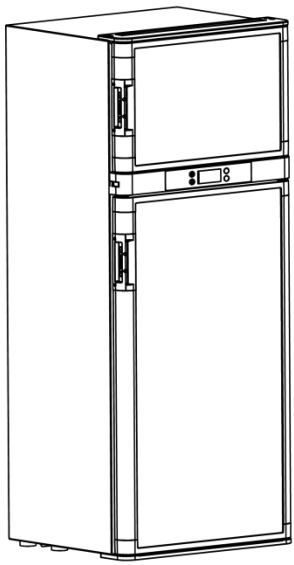

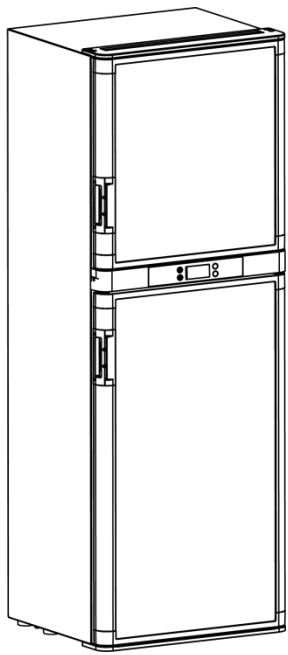

RCE140L **RCE170L**

2026 V0.1

1

RCE140L

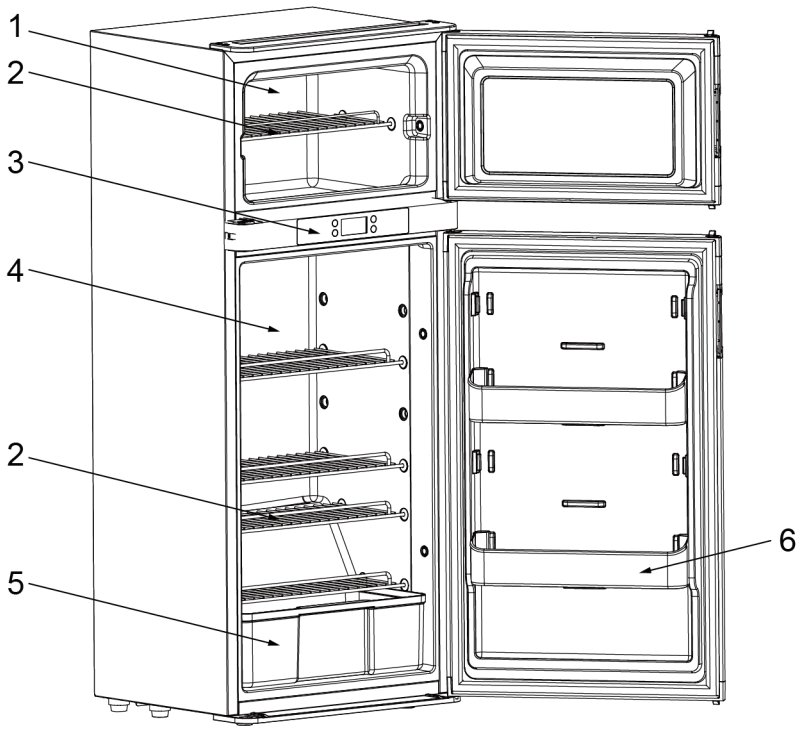

2

RCE170L

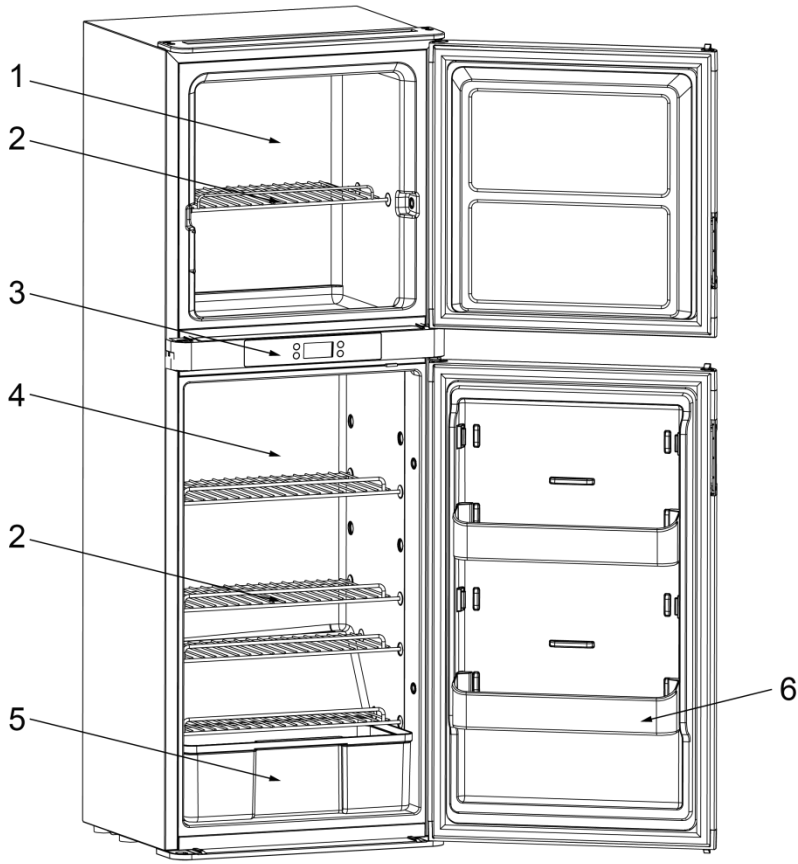

3

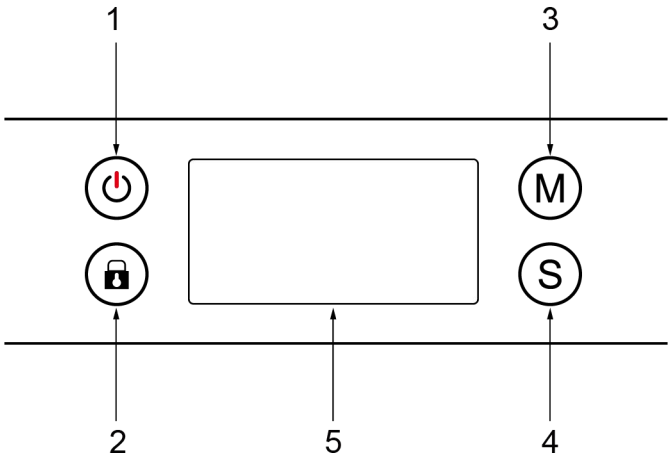

4

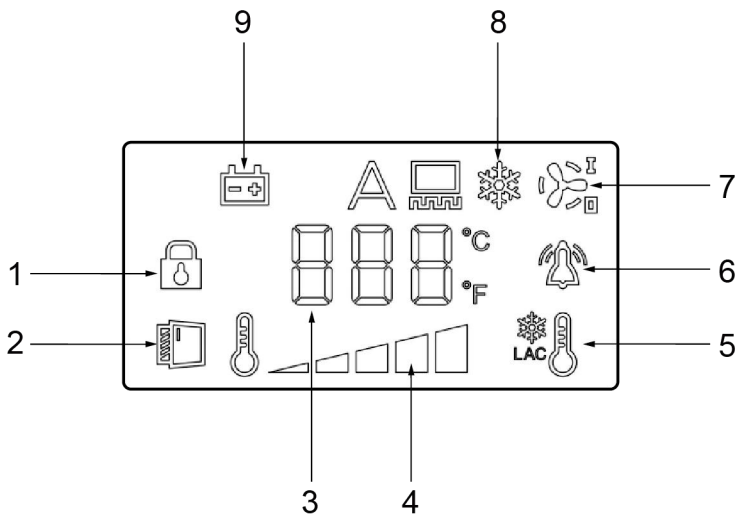

5

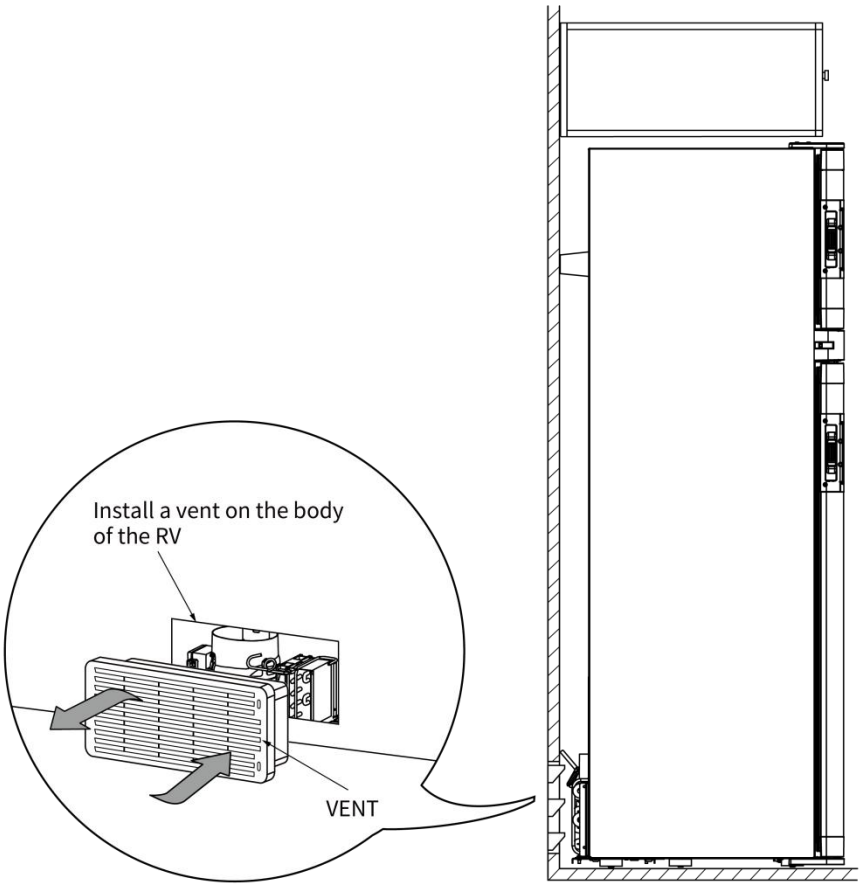

6

RCE140L

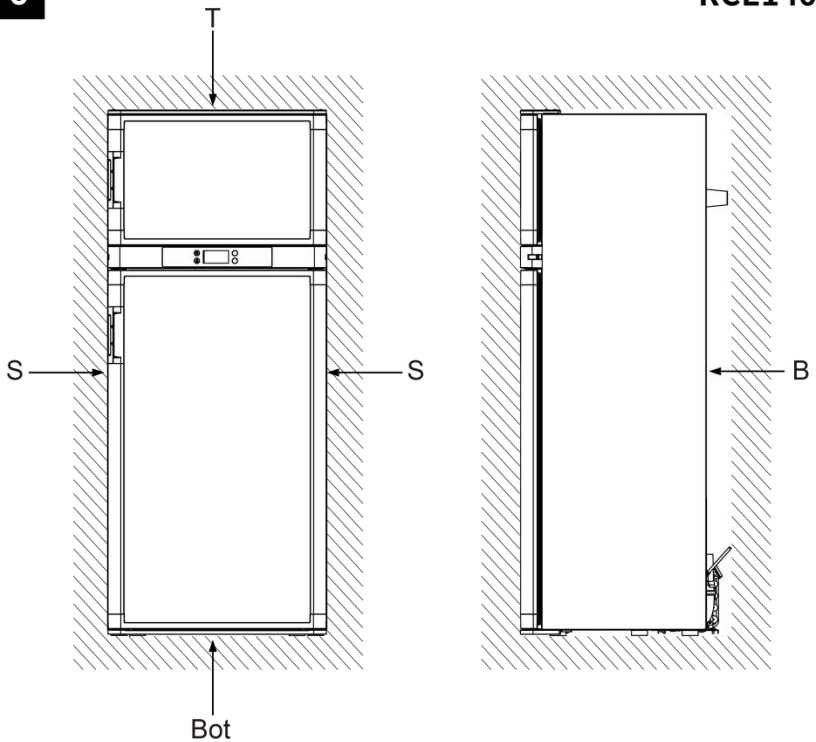

Minimum distances between the various parts of the appliance and the surrounding structure:

Minimum clearance	
T(Top)	10mm
S (Side)	5mm
Bot (Bottom)	Cannot be completely sealed
B(Back)	59mm

7

RCE170L

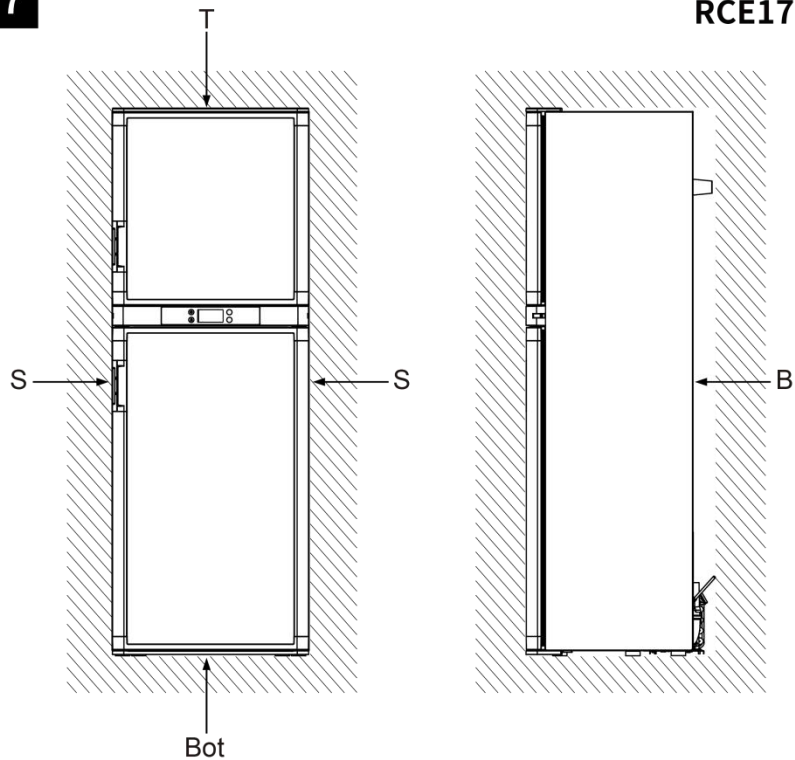

Minimum distances between the various parts of the appliance and the surrounding structure:

Minimum clearance	
T(Top)	10mm
S (Side)	5mm
Bot (Bottom)	Cannot be completely sealed
B(Back)	59mm

8

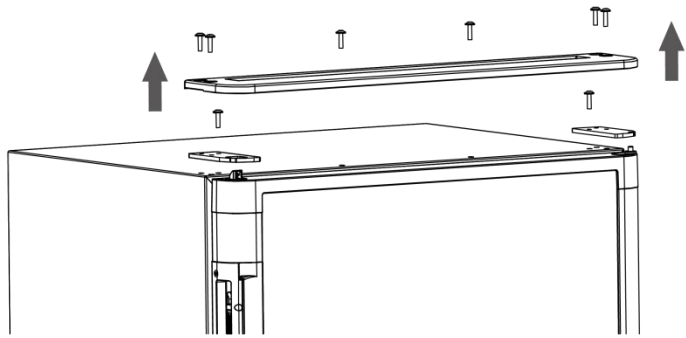

9

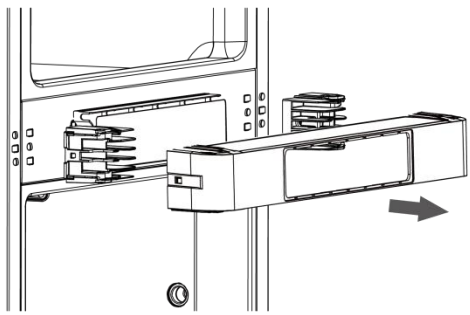

10

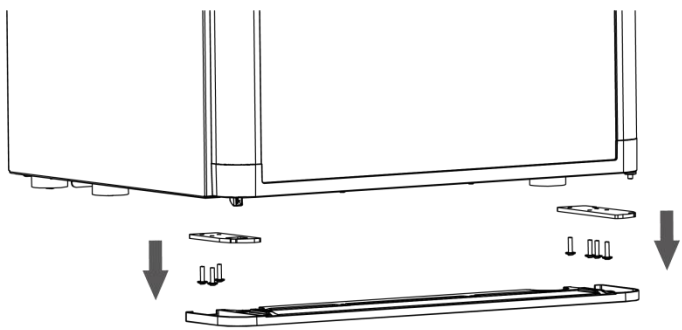

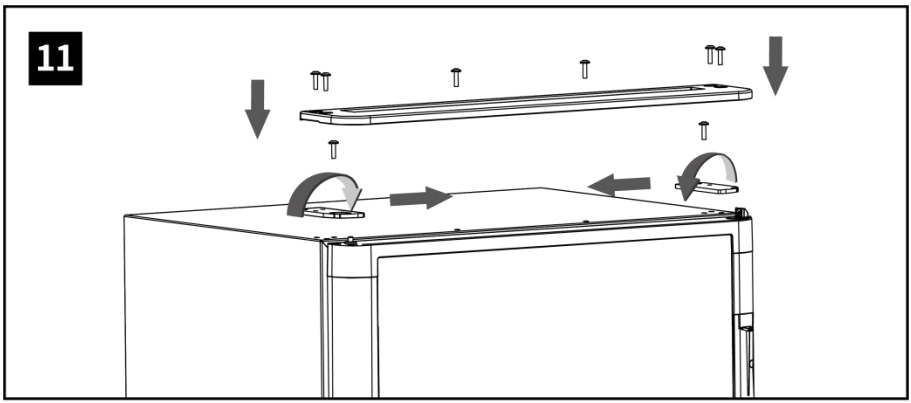
11

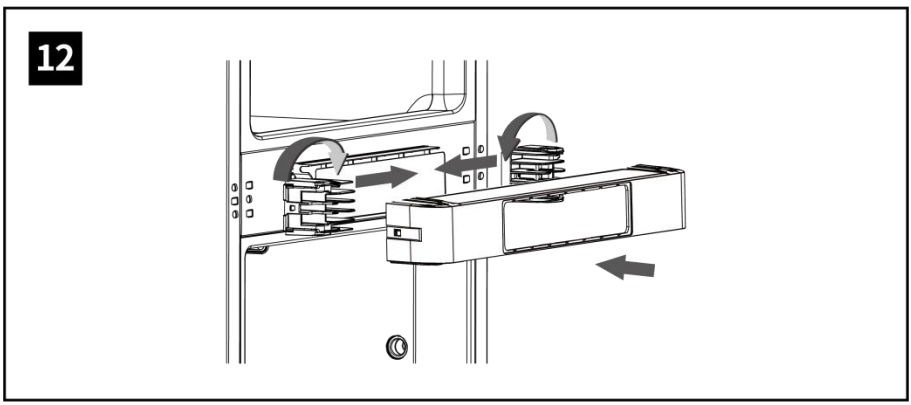
12

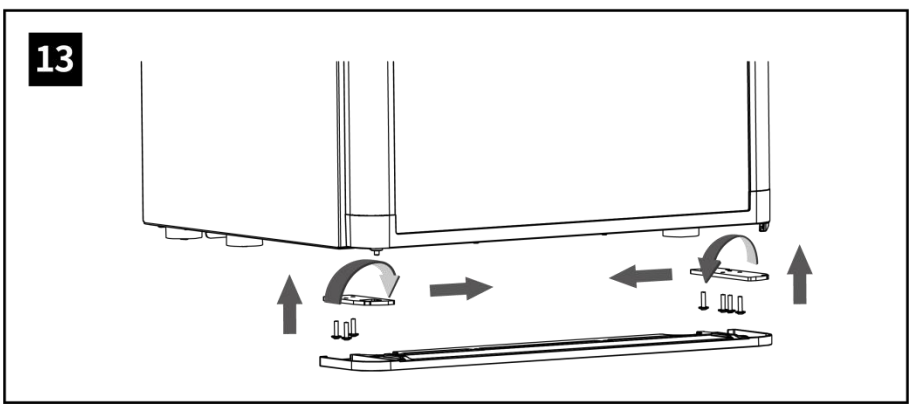
13

14

Wire dimensions DC					
Size		Max. length* 12V operation		Max. length* 24V operation	
Cross section (mm²)	AWG (Gauge)	[m]	[ft.]	[m]	[ft.]
2.5	12	2.5	8	5	16
4	12	4	13	8	26
6	10	6	20	12	39
10	8	10	33	20	66

15

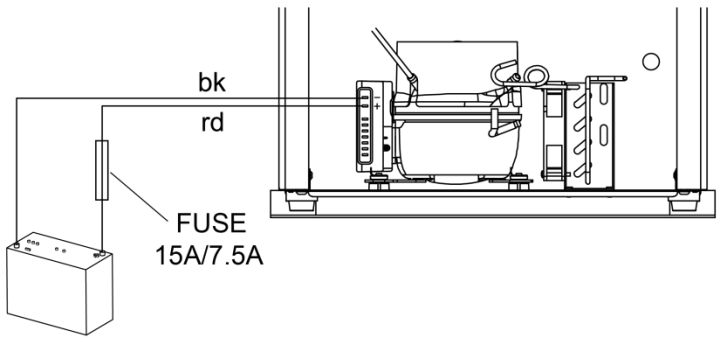

16

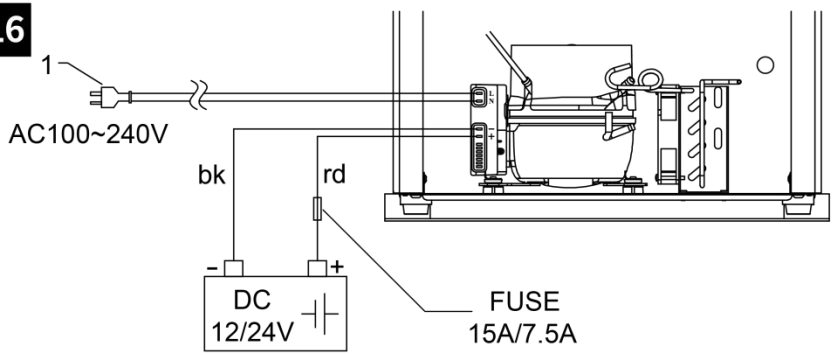

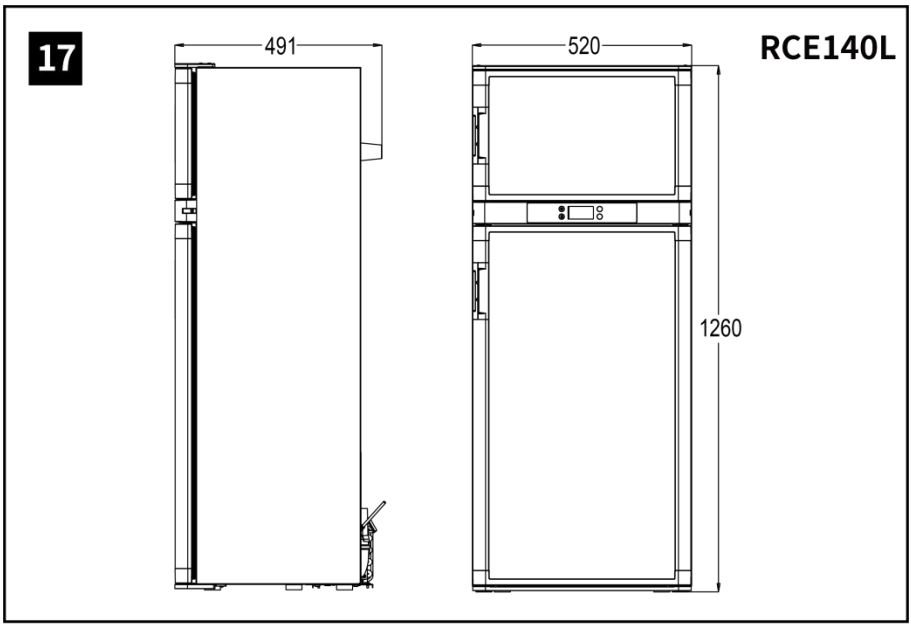
17
491
520
RCE140L
1260

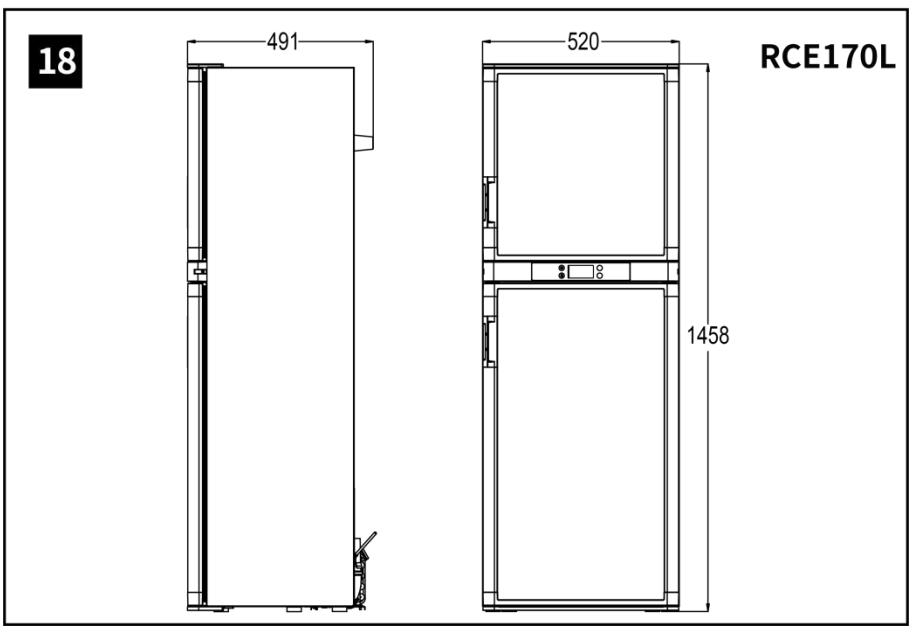
18
491
520
RCE170L
1458

Respected Users：

Thank you for choosing this refrigerator!

Please read this instruction manual carefully before installation and first use, and store it in a safe place. If you pass on the product to another person, hand over this instruction manual along with it.

Important Declaration

This Installation and Operating Manual applies **exclusively to the RCE series refrigerator**. Our company reserves the right to optimize and upgrade the product's appearance, structure, technical parameters, installation accessories and operation procedures **without prior notice**. All adjustments are intended to enhance product performance, energy efficiency and user experience.

Table of contents

1. Explanation of symbols 13
2. Safety instruction 13
   2.1 General safety 14
   2.2 Operating the device safely 16
3. Scope of delivery 18
4. Intended use 19
5. Technical description 19
   5.1 Control elements inside the refrigerator 19
   5.2 Control Panels 20
   5.3 Display panels 20
6. Installing and connecting the refrigerator 21

6.1 Safety instructions for installation on boats 21
6.2 Notes on installing the refrigerator 22
6.3 Installing the refrigerator 23
6.4 Positioning the shelves 23
6.5 Changing the door hinge 23
6.6 Connecting the refrigerator to DC voltage 24
6.7 Connecting the refrigerator to AC voltage 25
7. Using the refrigerator 25
7.1 Energy saving tips 26
7.2 Switching on the refrigerator 27
7.3 Setting the temperature 27
7.4 Mode setting 28
7.5 Volume setting 28
7.6 Child lock setting 28
7.7 Conserving foodstuffs 28
7.8 Defrosting the freezer 29
7.9 Switching off and storing the refrigerator 30
8. Cleaning and maintenance 30
9. Disposal 31
10. Troubleshooting 32
11. Technical data 36

1. Explanation of symbols

DANGER!

Safety instruction: Failure to observe this instruction will cause death or serious injury.

WARNING!

Safety instruction: Failure to observe this instruction can cause death or serious injury.

CAUTION!

Safety instruction: Failure to observe this instruction can lead to injury.

NOTICE!

Failure to observe this instruction can cause material damage and impair the function of the product.

NOTE!

Supplementary information for operating the product.

2. Safety instruction

The manufacturer accepts no liability for damage in the following cases:

- Faulty assembly or connection.
- Damage to the product resulting from mechanical influences and incorrect connection voltage.

- Alterations to the product without express permission from the manufacturer.
- Use for purposes other than those described in the operating manual.

2.1 General safety

DANGER!

Failure to obey these warnings will result in death or serious injury.

DANGER OF ELECTROCUTION

On boats: If the device is powered by AC power, ensure that the power supply has a residual current circuit breaker and is reliably grounded.

WARNING!

Failure to obey these warnings could result in death or serious injury.

WARNING!

Risk of fire / flammable materials.

DANGER OF ELECTROCUTION

- Installations in washrooms and areas exposed to water, must be performed by a qualified technician.
- Do not operate the device if it is visibly damaged.
- If this device's power cable is damaged, it must be replaced by the manufacturer, customer service or a similarly qualified person in order to prevent safety hazards.

- This device may only be repaired by qualified personnel. Inadequate repairs may cause serious hazards.

HEALTH HAZARD

- This appliance can be used by children aged from 8 years and above and persons with reduced Physical, sensory or mental capabilities or lack of experience and knowledge if they have been given supervision or instruction concerning use of the appliance in a safe way and understand the hazards involved. Children shall not play with the appliance. Cleaning and user maintenance shall not be made by children without supervision.
- Children aged from 3 to 8 years allowed to load and unload refrigerating appliances.

EXPLOSION HAZARD

- Do not store any explosive substances such as spray cans with a flammable propellant in the cooling device.

CAUTION!

- Failure to obey these cautions could result in minor or moderate injury.

HEALTH HAZARD

- Food may only be stored in its original packaging or in suitable containers.

DANGER OF CRUSHING

- Do not put your fingers into the hinge.

NOTICE! DANGER OF DAMAGE

- Check that the voltage specification on the type plate is the same as that of the power supply.

- Never pull the plug out of the socket by the connection cable.
- If the refrigerator is connected to the DC socket:

  Disconnect the refrigerator and other electric consumers from the battery before connecting the quick charging device.
- If the refrigerator is connected to the DC socket:

  Disconnect the refrigerator or switch it off when you turn off the engine. Otherwise you may discharge the battery.
- The refrigerator is not suitable for storing substances which are caustic or contain solvents.
- Keep the drainage outlet clean at all times.
- Do not open the refrigerant circuit under any circumstances.
- Never transport the device in a horizontal position, so that no oil can leak out of the compressor.
- Make sure that the refrigerator circuit is not damaged during transportation. The refrigerant in the refrigerator circuit is highly flammable.
- In the event of any damage to the refrigerator circuit:

  - Avoid naked flames and sparks.

  - Air the room well.
- Set up the device in a dry location where it is protected against splashing water.

2.2 Operating the device safely

DANGER!

Failure to obey these warnings will result in death or serious

injury.

DANGER OF ELECTROCUTION

- Do not touch exposed cables with your bare hands. This applies especially when operating the device from the AC mains.

WARNING!

Failure to obey these warnings could result in death or serious injury.

Replacement cord instructions, type Y attachment

- Keep ventilation openings, in the appliance enclosure or in the built-in structure, clear of obstruction
- Do not use mechanical devices or other means to accelerate the defrosting process, other than those recommended by the manufacturer
- Do not damage the refrigerant circuit.
- Do not locate multiple portable socket-outlets or portable power supplies at the rear of the appliance
- To avoid a hazard due to instability of the appliance, it must be fixed in accordance with the instructions

CAUTION!

Failure to obey these cautions could result in minor or moderate injury.

DANGER OF ELECTROCUTION

- Before starting the cooling device, ensure that the power supply line and the plug are dry.

HEALTH HAZARD

- If you connect the device to a battery, make sure that no food comes into contact with the battery acid.

NOTICE! DANGER OF DAMAGE

- Do not use electrical devices inside the cooling device unless they are recommended by the manufacturer for that purpose.
- Do not place it near naked flames or other heat sources (heaters, direct sunlight, gas ovens etc.)

DANGER OF OVERHEATING

- Always ensure sufficient ventilation so that the heat generated during operation can dissipate. Make sure that the device is sufficiently far away from walls and other objects so that the air can circulate.
- Ensure that the ventilation vents are not covered.
- Do not fill the inner container with ice or fluid.
- Never immerse the appliance in water.
- Protect the appliance and the cable against heat and moisture.
- Make sure that foodstuffs do not touch the walls of the cooling area.

3. Scope of delivery

Quantity	Description
1	Refrigerator with shelves
1	Installation and operating manual

4. Intended use

The refrigerator is designed for installation in caravans and motorhomes, suitable for use in caravans, motorhomes, camper vans and similar platforms. It is mandatory that the unit be installed in a fixed position. Once installed, only the front of the appliance shall be accessible.

The refrigerator is only suitable for cooling, freezing and storing foodstuffs. The refrigerator is not intended for the proper storage of medicine.

CAUTION! HEALTH HAZARD

Please check if the cooling capacity of the refrigerator is suitable for storing the food you wish to cool.

5. Technical description

This product can cool food and keep them cool. And can freeze food in the freezer.

All materials used in the refrigerator are compatible for use with foodstuffs. The refrigerant circuit requires regular cleaning and maintenance.

The cooling device can withstand a short term inclination of 30°, for example on boats.

The temperature is set using the control panel.

RCE140L/RCE170L

Five temperature ranges from 0°C (32°F) to +10°C(50°F).

5.1 Control elements inside the refrigerator

The various types of refrigerators are shown in the following illustrations:

- RCE140L: **fig.1**, page 1

- RCE170L: **fig.2**, page 2

No.	Explanation
1	Freezer compartment
2	Wire shelf
3	Control panel
4	Cold compartment
5	Fruit bowl
6	Storage Box

5.2 Control Panels

No. In fig. 3，page 3	
No.	**Explanation**
1	On/Off button
2	Child lock button
3	Long press the compressor working mode (high speed, medium speed, automatic) to set Short press the buzzer to adjust the alarm volume (B01~B03)
4	Long press the refrigerator to work in sleep mode Short press the refrigerator temperature adjustment
5	Display screen

5.3 Display panels

No. In fig. 4，page 3	
No.	**Explanation**
1	Child lock

2	Door opening
3	Display screen
4	Temperature setting
5	Defrosting
6	Alarm
7	External fan working
8	Refrigerator work
9	DC work

6. Installing and connecting the refrigerator

6.1 Safety instructions for installation on boats

Please note the following instructions for installation on boats:

DANGER! DANGER OF ELECTROCUTION

- If the appliance is powered by AC power, ensure that the voltage supply has a residual current circuit breaker and is reliably grounded.

NOTICE! DANGER OF DAMAGE

- The cooling device can withstand a short term inclination of 30°, for example on boats. When setting up the refrigerator, note that it must be fastened to take account of this. If you have any questions regarding installation, consult your specialist dealer.
- Install the refrigerator so that the warm air produced can easily flow away.

- The appliance is designed for ambient temperatures between +10°C (50°F) and +43°C (109°F).

6.2 Notes on installing the refrigerator

Observe the following when installing the refrigerator:

- Install the refrigerator in an appropriate position, and vents must be mounted on the body of the vehicle to ensure internal heated air can be dissipated adequately and quickly.
- The minimum dimensions of ventilating openings and arrangement:

  Minimum opening size of ventilation vent: 450×156 mm

  Ventilation vent location: 5 cm above the bottom (**fig. 5**, page 4).
- The vent louver can be purchased separately from the supplier, while the customer can also prepare their own, but in the process, special care must be taken to match the opening size to the selected vent louver.

Product size:

Model	Dimensions W*H*D (mm)	Dimensions W*H*D (inch)
RCE140L	520*1260*491	20.47*49.61*19.33
RCE170L	520*1458*491	20.47*57.40*19.33

Observe the following installation dimensions:

Model	Dimensions W*H*D (mm)	Dimensions W*H*D (inch)
RCE140L	530*1270*450	20.87*50.00*17.72
RCE170L	530*1468*450	20.87*57.80*17.72

- The minimum distances between the various parts of the appliance and the surrounding structure are shown in **fig.6**, page 5 and **fig.7**, page 6.

- Keep objects clear of openings in the housing or installation structure (such as ventilation slots, etc.).
- In high humidity environments, Condensate is produced when the refrigerator is operating normally. You can wipe up the condensate on the floor of the refrigerator in regular intervals.

6.3 Installing the refrigerator

➢ Push the refrigerator into the recess of the cabinet.

➢ Open the refrigerator door.

➢ Fix the refrigerator in place using suitable screws.

6.4 Positioning the shelves

WARNING! Children beware!

All shelves are fixed in place to prevent children from climbing inside the refrigerator.

- Only remove the shelves for cleaning purposes.
- Afterwards, refit the shelves in the same position and lock them in place.

6.5 Changing the door hinge

You can also change the hinge and lock assembly of the door, so that it opens to the right rather than the left.

➢ Proceed as shown (**fig.8**, Page 7 to **fig.13**, Page 8).

➢ Door to be purchased from dealer.

6.6 Connecting the refrigerator to DC voltage

NOTICE! DANGER OF DAMAGE

- To avoid voltage drops and loss of performance, keep the connection cable as short as possible and not be interrupted.Therefore avoid additional switches, plugs, power strips or Power bar.
- Disconnect the cooling device and other electric consumers from the battery before you connect the battery to a quick charging device. Over voltage can damage the electronics of the device.

The refrigerator can be operated with 12 or 24 VDC voltage supply.

For safety reasons, the refrigerator is equipped with an electronic system to prevent the polarity being reversed. This protects the refrigerator against reversed polarity when connecting to a battery and against short circuiting.

To protect the battery, the refrigerator switches off automatically if the voltage is insufficient (see table below).

	12V	**24V**
Cut-off voltage	10.4V	22.8V
Cut-in voltage	11.7V	24.2V

Determine the required cross section of the cable in relation to the cable length according to **fig.14**, Page 9.

NOTICE! DANGER OF DAMAGE

Make sure the polarity is correct.

➢ Before starting up the device for the first time, check whether the operating voltage and the battery voltage match (see type plate).

- Connect your refrigerator to a plug socket which is fuse protected at 15A (at 12V) or 7.5A (at 24V) (**fig.15**, Page 9).
- Connect the red cable to the positive terminal of the battery.
- Connect the black cable to the negative terminal of the battery.

6.7 Connecting the refrigerator to AC voltage

DANGER! DANGER OF ELECTROCUTION

- Never handle plugs and switches with wet hands or if you are standing on a wet surface.
- If you are operating your refrigerator on board a boat with an AC mains connection using a shore connection, you must install a residual current circuit breaker between the AC mains supply and the refrigerator.
- Seek advice from a trained technician.

RCE140LACDC, RCE170LACDC

- With AC and DC compressor controller, the refrigerator can work at 100 ~ 240V AC voltage. As shown in **fig16**, page 9, the AC plug is inserted into an AC power outlet with a reliable grounding.
- Connect the DC power cord to the positive and negative terminals of the battery (see "Connecting the Refrigerator to the DC voltage", page 24).

7. Using the refrigerator

The refrigerator conserves fresh foodstuffs. The freezer compartment conserves frozen foodstuffs and freezes fresh foodstuffs.

NOTICE! DANGER OF DAMAGE

- Do not place any electrical devices inside the cooler. The only

exceptions are devices approved for the purpose by the manufacturer.

- Ensure that food or liquids in glass containers are not excessively refrigerated. Liquids expand when they freeze and can therefore destroy glass containers.
- Food may only be stored in its original packaging or in suitable containers.
- Make sure that you only put items in the cooler which may be kept at the selected temperature.

NOTE!

- Before starting your new refrigerator for the first time, you should clean it inside and outside with a damp cloth for hygienic reasons (please also refer to the chapter “ Cleaning and maintenance ” on Page 30).
- Do not use force to press the flap of the freezer.
- Do not pull out the dividing wall if there is ice in the freezer.
- Do not remove the control panel membrane when operating the refrigerator.

7.1 Energy saving tips

- Choose a well ventilated location which is protected from direct sunlight.
- Allow hot food to cool down first before you put it in the refrigerator.
- Do not open the refrigerator more often than necessary. If the door is left open for more than 5 minutes, the light starts to flash.
- Do not leave the door open for longer than necessary.
- Defrost your refrigerator as soon as a layer of ice forms.

- Avoid unnecessarily low temperature settings.
- Clean dust and dirt from the condenser at regular intervals.

7.2 Switching on the refrigerator

➢ Switch the refrigerator on by pressing the ⏻ button.

NOTE!

After switching on, the refrigerator needs some time before the compressor starts up.

➢ **Turn on the quite mode:** Long press the temperature button, the display shows SLP that the refrigerator is in sleep mode.

➢ **Turn off the silent mode:** Long press the temperature button, SLP the indication disappears, and the silent mode is exited.

7.3 Setting the temperature

➢ Press the Ⓢ button repeatedly until the desired temperature level is set. The lower/largest LED is the coldest setting. The display temperature file indicates the high or low temperature.

➢ To switch from the coldest level 5 to the warmest level 1 press the Ⓢ button again.

NOTE!

The cooling performance can be affected by:

- The ambient temperature.
- The amount of food to be conserved.
- The frequency with which the door is opened.

If the ambient temperature is at 16°C (61°F) to 20°C (68°F), set the refrigerator to at least level 2.

7.4 Mode setting

- The refrigerator has three working modes: automatic gear (Aut) high gear (Fur) low gear (Eco).
- Long press the mode button to enter the mode selection state, click again to enter the mode to confirm.

7.5 Volume setting

- Users can adjust the volume according to their preferences.
- Short press the mode button to adjust the volume, the volume is divided into b01~ b03 (the volume becomes larger in turn).

7.6 Child lock setting

- In order to prevent misoperation during use, the refrigerator has a child lock button.
- Tap the child lock button, the display shows the sign to enter the child lock state, and there is no response when clicking any button at this time, press and hold the child lock button again, and the child lock icon disappears to release the child lock.

7.7 Conserving foodstuffs

NOTICE! DANGER OF DAMAGE

- Do not conserve warm foodstuffs in the refrigerator.
- Do not place glass containers containing liquid in the freezer compartment.

NOTE!

- Food which can easily absorb tastes and odours, as well as liquids and products with a high alcohol content, should be conserved in airtight containers.
- You can conserve foodstuffs in the refrigerator. The time for which the food can be conserved in this way is usually stated on the package.

The refrigerator is divided in different zones with different temperatures:

- The colder zones are immediately above the drawers for fruit and vegetables, near the back wall.
- Observe the temperature information and best before date on the food packaging.
- Observe the following when using the refrigerator:

  - Never re-freeze products which have started defrosting or have been defrosted; consume them as soon as possible.

  - Wrap food in aluminium foil or cling film and shut in a suitable box with a lid.This ensures that aromas, the shape and the freshness will be better conserved.

7.8 Defrosting the freezer

NOTICE! DANGER OF DAMAGE

Never use mechanical tools to remove ice or to loosen objects stuck to the device. The only exceptions are devices approved for the purpose by the manufacturer.

This is how to defrost the refrigerator:

- ➢ Empty the contents.If necessary, put them in another cooling device to keep them chilled.
- ➢ Press the ⏻ button until the refrigerator switches off.

- Open the refrigerator door fully to allow the frost to melt naturally.
- Clean the fridge inside after defrosting.

7.9 Switching off and storing the refrigerator

If you do not intend to use the refrigerator for a long time, proceed as follows:

- Press the ⏻ button until the refrigerator switches off.
- Disconnect power.
- Clean the refrigerator (see chapter “ Cleaning and maintenance ” on page 30).
- The door stays open thus preventing smells from arising.

8. Cleaning and maintenance

NOTICE! DANGER OF DAMAGE

- Do not use abrasive cleaning agents or hard objects during cleaning as these can damage the refrigerator.
- Do not use hard or pointed tools to speed up the defrosting process.

- Always disconnect the device from the power supply before you clean and service it.
- Clean the refrigerator regularly and as soon as it becomes dirty with a damp cloth.
- Make sure that no water drips into the seals. This can damage the electronics.
- Wipe the refrigerator dry with a cloth after cleaning.
- Clean dust and dirt from the condenser at regular intervals.

To avoid contamination of food, please respect the following instructions:

- Opening the door for long periods can cause a significant increase of the temperature in the compartments of the appliance
- Clean regularly surfaces that can come in contact with food and accessible drainage systems
- Clean water tanks if they have not been used for 48 h; flush the water system connected to a water supply if water has not been drawn for 5 days
- Store raw meat and fish in suitable containers in the refrigerator, so that it is not in contact with or drip onto other food
- Two-star frozen-food compartments are suitable for storing pre-frozen food, storing or making ice-cream and making ice cubes
- One-, two- and three-star compartments are not suitable for the freezing of fresh food
- If the refrigerating appliance is left empty for long periods, switch off, defrost, clean, dry, and leave the door open to prevent mould developing within the appliance

9. Disposal

WARNING! CHILDREN BEWARE

Before disposing of your old refrigerator:

- Take off the doors.
- Leave storage surfaces in the refrigerator so that children cannot climb inside.

- Place the packaging material in the appropriate recycling waste bins wherever possible.

Correct Disposal of this product	
	This marking indicates that this product should not be disposed with other household wastes throughout the EU. To prevent possible harm to the environment or human health from uncontrolled waste disposal, recycle it responsibly to promote the sustainable reuse of material resources. To return your used device, please use the return and collection systems or contact the retailer where the product was purchased. They can take this product for environmentally safe recycling.

10. Troubleshooting

Display alarm

The display displays the relevant error code. After troubleshooting, the display code disappears.

RCE140L, RCE170L

Number of flashes	Fault	Possible cause
E01	Low Voltage	The supply voltage is outside of the set range.
E02	Excessive fan current	The fan load on the electronics unit is more than 1 A.
E03	The motor doesn't start	The rotor is jammed. The pressure difference in the cooling system is too high.
E04	Speed too low	If the cooling system is overloaded, the minimum speed of the motor of 1,850 rpm cannot be maintained.
E05	Overheating of the electronics unit	If the cooling system is loaded too heavily or the temperature is set too high, the electronics can overheat.
E06	Temperature sensor errors	Room NTC1 Error.

Compressor does not run (battery connection)

Problem	Possible cause	Remedy
U_{KL} = 0 V	There is an interruption in the battery electronics connection	Establish a connection
	Main switch faulty (if installed)	Replace the main switch
	Additional supply line fuse has blown (if installed)	Replace the supply line fuse
$U_{Term} \leq U_{ON}$	Battery voltage is too low	Charge the battery
Start attempt with $U_{Term} \leq U_{OFF}$	Loose cables Poor contact (corrosion)	Establish a connection
	Battery capacity too low	Replacing the battery
	Cable cross section too small	Replace the cable (**fig.14**, Page 9)
Start attempt with $U_{Term} \geq U_{ON}$	Ambient temperature too high	–
	Insufficient ventilation	Clean vent
	Condenser is dirty	Clean the condenser
Electric circuit between the pins in the compressor interrupted	Defective compressor	Contact customer service

U_{Term}: Voltage between the positive and negative terminals of the electronics

U_{ON}: Cut-in voltage of the electronics

U_{OFF}: Cut-off voltage of the electronic

Compressor is not running (connected to AC supply)

Problem	Possible cause	Remedy
No voltage	Connection supply line interrupted	Establish a connection
	Main switch faulty (if installed)	Replace the main switch
	Additional supply line fuse has blown (if installed)	Replace the supply line fuse
Voltage is present but the compressor doesn't run	Ambient temperature too high	–
	Insufficient ventilation	Clean vent
	Condenser is dirty	Clean the condenser
Electric circuit between the pins in the compressor interrupted	Defective compressor	Contact customer service

Poor cooling, increase in interior temperature

Problem	Possible cause	Remedy
Compressor runs for a long time/ continuously	Ambient temperature too high	–
	Insufficient ventilation	Clean vent
	Condenser is dirty	Clean the condenser
	Faulty fan	Replace the fan
Compressor does not run often	Battery capacity exhausted	Charge the battery

Unusual noises

Problem	Possible cause	Remedy
Loud humming	A component of the refrigerant circuit cannot move freely (touching the wall)	Bend the component carefully away from the obstruction
	There is a foreign object stuck between the cooling unit and the wall	Remove the foreign object
	Fan noise	Replace the fan

11. Technical data

	RCE140L	RCE170L
AC/DC Model DC Model	RCE140LACDC RCE140LDC	RCE170LACDC RCE170LDC
Refrigerator compartment storage volume	113L (3.99cu.ft)	113L (3.99cu.ft)
Freezer compartment storage volume	28L (0.99cu.ft)	58L (2.05cu.ft)
Total storage volume	141L (4.98cu.ft)	171L (6.04cu.ft)
Voltage	Reference rating label	
Rated current	Reference rating label	
Cooling temperature range Refrigerator Freezer	0°C(32°F)~+10°C(50°F) -18°C(0°F)	
Climatic class	T	
Relative humidity	maximum 90%	
Short-term inclination	maximum 30°	
Max. Pressure	LP 0.6bar/HP 10 bar	
Propellant	Cyclopentane	
Refrigerant	Reference rating label	
Refrigerant quantity	Reference rating label	
Dimensions（W*H*D）	**fig.17**,page 10	**fig.18**,page 10
Weight	32.5kg （71.65lbs）	34.5kg （76.06lbs）
Inspection /certification		

Note：All parameters listed are subject to change without notice and the specifications shown on unit data plates shall prevail