EN User Manual & Mounting Instructions of PLUS FAN

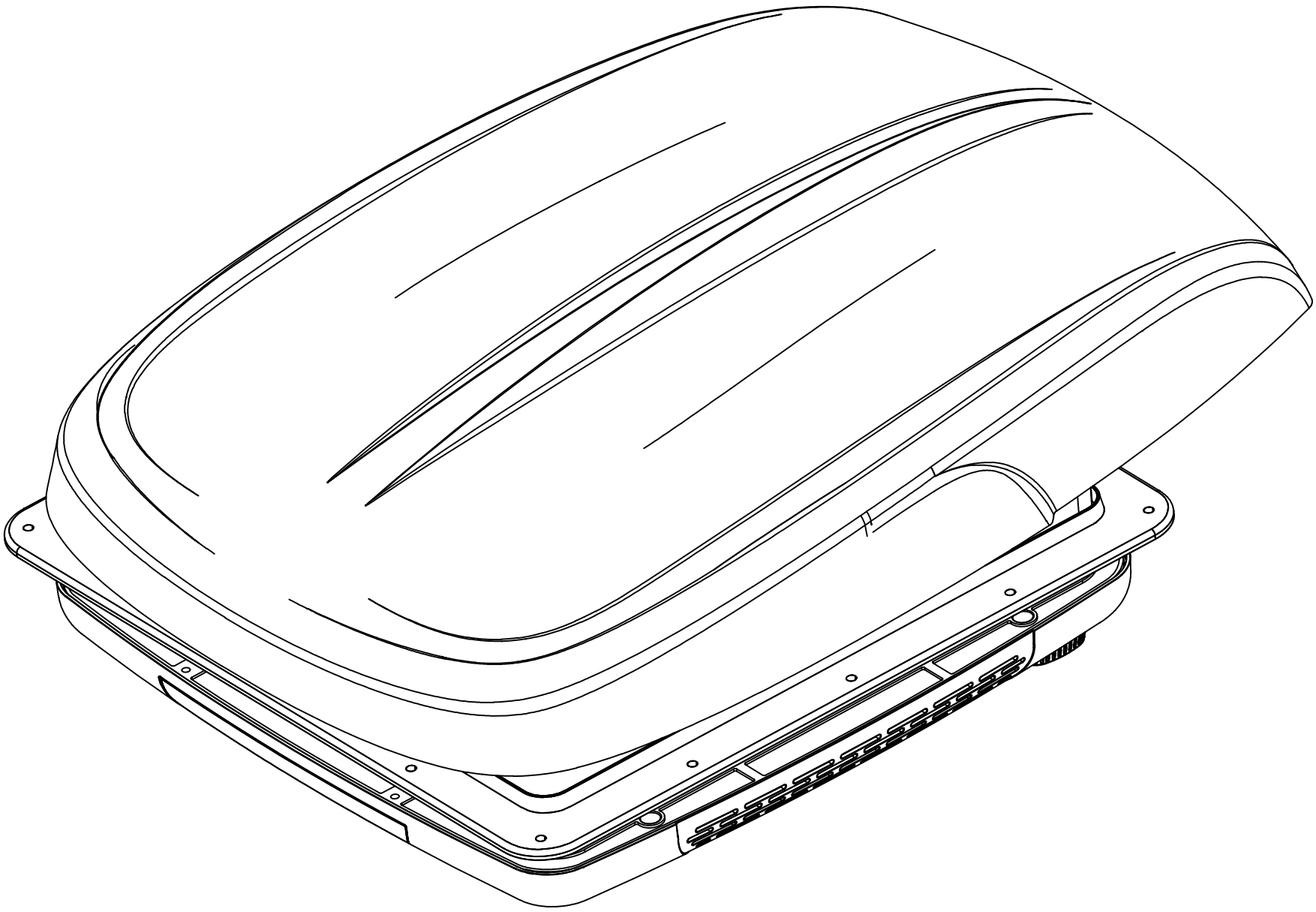

Model:3J-PF

EN >>

Contents

USE

Main Components ---------- 02
Descriptions of Functions and Parameters ---------- 03
Precautions ---------- 04
How to use PLUS FAN ---------- 05

Installation

Overall Dimensions ---------- 10
Packing List ---------- 11
Mounting of PLUS FAN ---------- 13

Others

Warranty regulations ---------- 19
Warranty card ---------- 20

- Thank you for choosing our product! Please read through this Manual before mounting and keep it properly for further reference.

Main Components

PLUS FAN

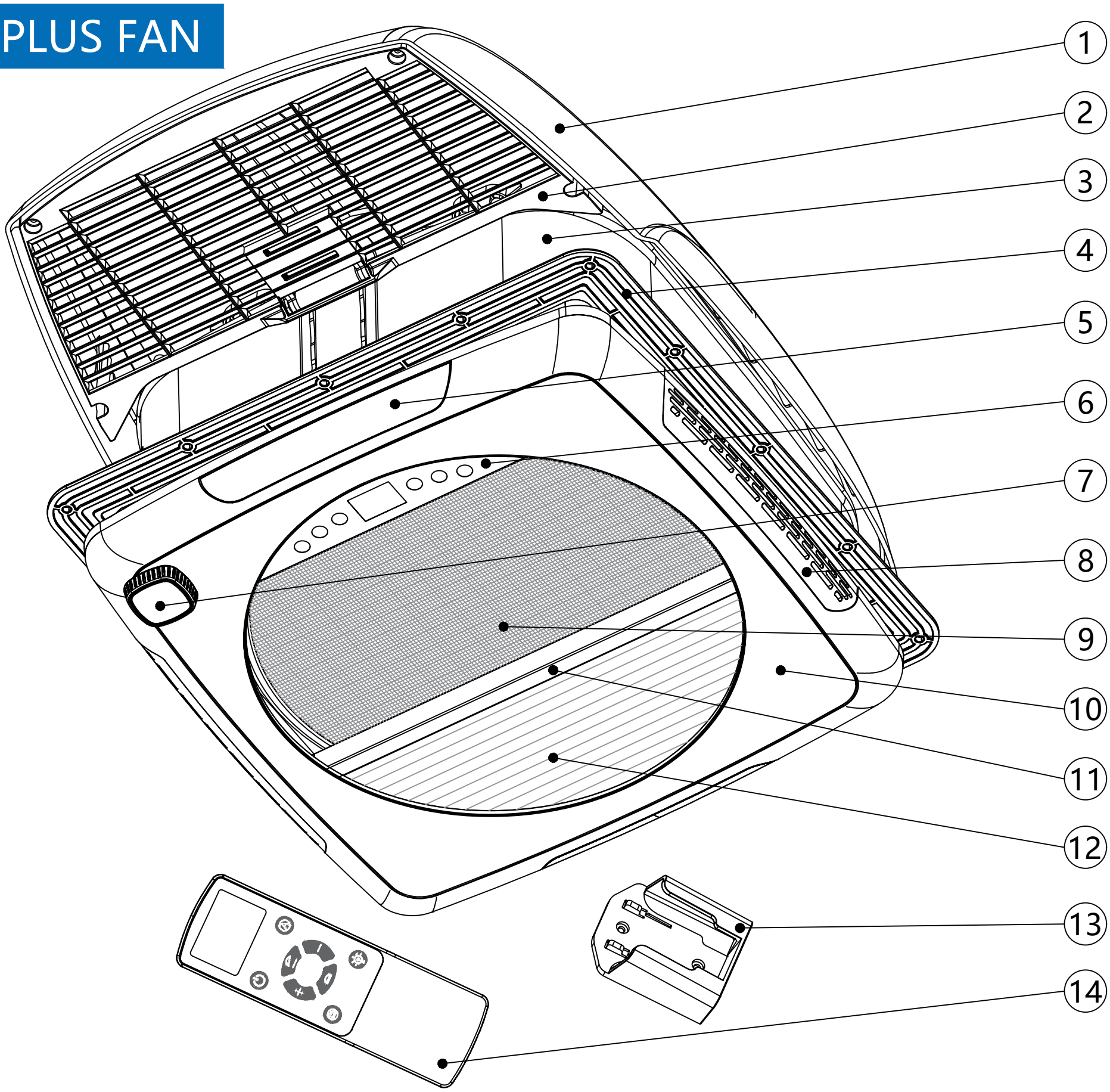

1. Top cover
2. Outer grid
3. Mounting frame
4. Body fixing plate
5. Lampshade
6. Control panel
7. Hand knob
8. Interior trim frame
9. Inner strainer
10. Decorative sticker for interior trim frame
11. Push rod
12. Pleated shade cloth
13. Remote control base
14. Remote control

Descriptions of Functions and Parameters

Safety Protection Function	
Fan blade anti-pinch function	In case of any abnormal resistance when the the fan blade of PLUS FAN is rotating, the fan blade will stop after being blocked, and cannot work normally until its rotation is confirmed normal;
Top cover anti-pinch function	In case of any abnormal resistance during the lifting and lowering of the top cover of PLUS FAN, the top cover will stop immediately and cannot work normally until problem is removed.
Voltage protection	When the input voltage of the PLUS FAN ventilating fan is smaller than 9V or higher than 16V, the PLUS FAN ventilating fan does not work and is under voltage protection to prevent the vehicle battery from feedback or the PLUS FAN ventilating fan from being damaged;

Performance Parameters	
Opening size	355mm×355mm/400mm×400mm
Thickness of mounting wall	27-80mm
Power	Full load power: 20W+4W (max. wind speed and full lighting)
Voltage	Normal voltage: 12V, working voltage: 9-16V (PLUS FAN does not work when the voltage is smaller than 9V or greater than16V)
Current	Gear 4 by default: ≤0.25A, full-load maximum current ≤1.6A, locked-rotor maximum current ≤2.0A
Working noise	Air outlet noise of Gear 4 by default of PLUS FAN ≤ 29dB, air inlet noise ≤32dB;
	Air outlet noise of Gear 10 ≤47dB, air inlet noise ≤53dB;
ventilation	ventilation: ~3,000 m^3/h
IP rating	IP rating: IPX4
Temperature adjustment in AUTO mode	Default temperature of control panel: 26℃ (non-adjustable); range of adjustable temperature in remote control: -2℃~40℃

Precautions

Please read through this Manual before mounting, and install the casement window in strict accordance with the provisions contained in this Manual. In addition, keep this Manual properly for further reference.

To avoid any personal injury or property loss of users and third parties, please observe the safety warnings and precautions contained herein strictly.

- Marks and meanings

⚠	Warning! Failure to abide by the requirements may lead to serious injury or damage.
❗	Caution! Failure to abide by the requirements may lead to damage.
⊘	Operation is prohibited.
ⓘ	Relevant information shall be noted.

⚠ Warning!

1.Please ask a professional to install the casement window;

2.The manufacturer is not held liable for any damage of the casement window by external force or arbitrary without the explicit permission of the manufacturer;

3.Open the top cover of the PLUS FAN when driving. Please pay attention to the driving height; otherwise the top cover may be damaged when driving;

4.The PLUS FAN must be connected to a power supply of "DC12V, max. 5A". Do not connect it with other power supplies (e.g.: DC24V, alternating current, etc.);

5. When connecting power supply with PLUS FAN, please confirm "+" (anode) and "-" (cathode) correctly. The red wire is "+" while the black wire is "-".

❗ Caution!

1.In case of failure, power off and restart the ventilating fan and reset the fan's parameters. If fault still exists after the measures above, please consult the dealer immediately;

2.Please pay attention to the height limit on road when the top cover is opened during driving, so as to avoid damaging the top cover after collision;

3.Please pay attention to the weather conditions when opening the top cover of the ventilating fan while driving. Do not open the top cover in strong wind or heavy rain;

4. When manually closing/opening the top cover, please turn the handle to completely close/open the top cover. Do not turn the handle again after completely closing/opening, so as to avoid damaging the manual function of the ventilation fan.

How to Use PLUS FAN

Control panel

Touch icons	ON/OFF	IN/OUT	AUTO	FAST	SLOW	LAMP
Corresponding	Power	In or Out	AUTO	FAST	SLOW	LAMP

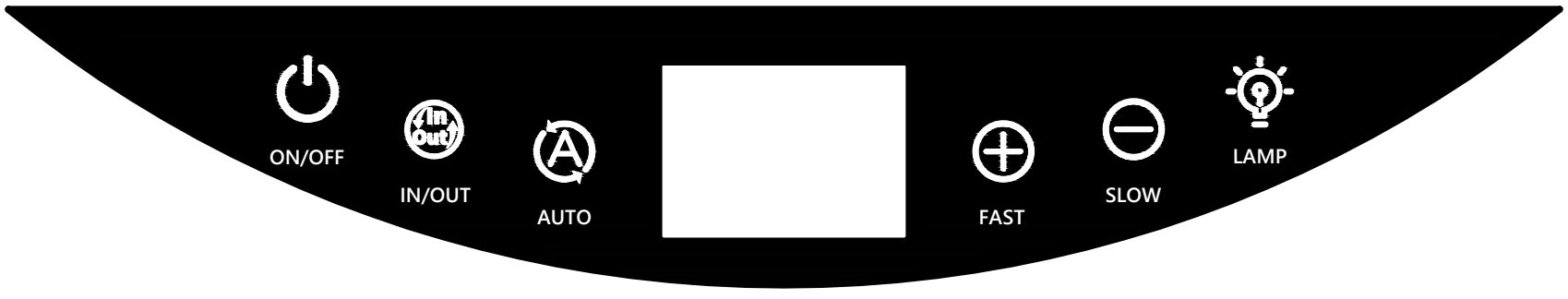

Control Panel

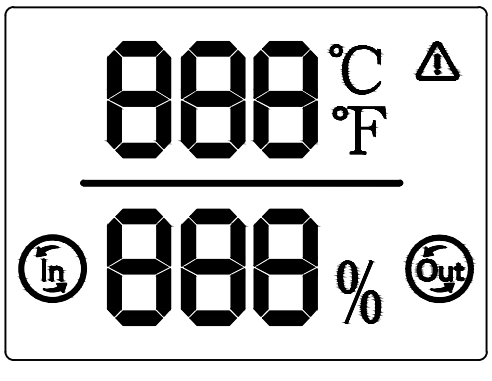

LCD Display Content in Control Panel

Fault code ⚠	
E1	Voltage > 16V
E2	Voltage < 9V
AES	POST (motor/pcb)

Display icons	888 ℃ ℉	In Out	888 %		⚠
Function	Current indoor temperature	IN/OUT	FAST	SLOW	Fault Display
Icon	FAST SLOW Press and hold to switch temperature units	IN/OUT	FAST	SLOW	Fault Display

Startup temperature of the control panel under automatic mode by default 26℃/79℉!
"RES"Fault code clears upon completion of POST(Power-On Self-Test),then the system enters normal operation interface.

How to Use PLUS FAN

Remote control

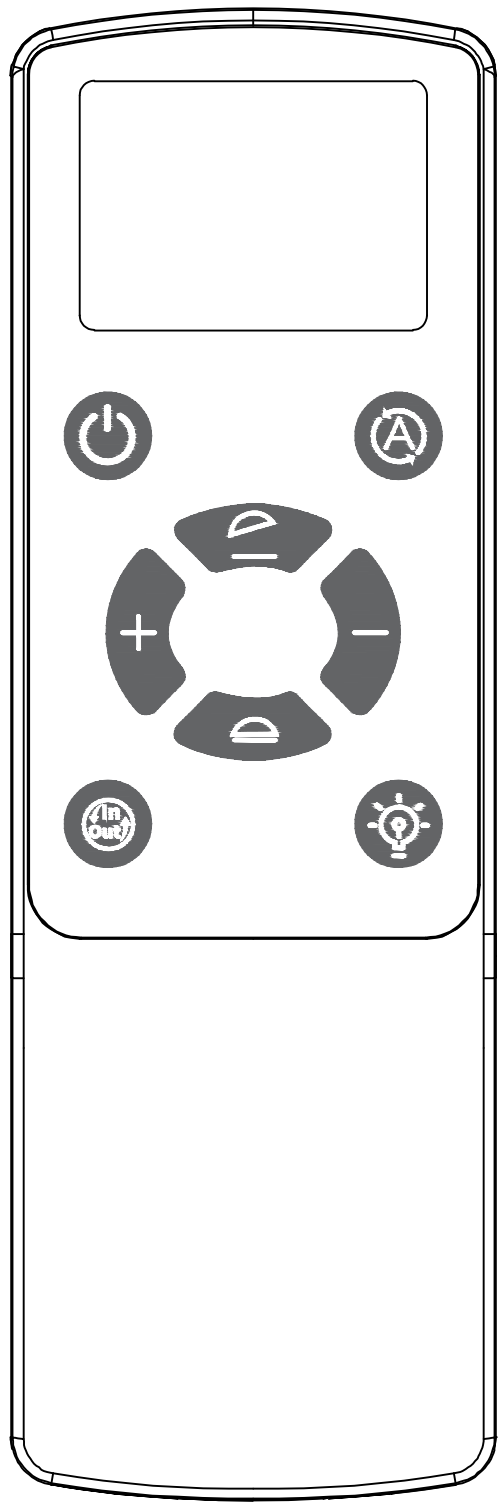

Button icon in remote control	Corresponding functions	Remarks
	Power switch	Press it to turn on or press and hold it turn off
	AUTO mode	Adjust the temperature and turn on and off automatically
	Forward and backward rotation of fan	Low noise and comfort during air inlet and out
	LAMP	Remote control of warm white light
+	Fan acceleration	Stable acceleration from Gear 0 to 10
—	Fan deceleration	Fast deceleration from Gear 10 to 0
	Top cover on	Light transmission during ventilation can prevent mosquitoes
	Top cover off	Sealed design for reducing effect stylish interior

Please turn off the power when leaving the vehicle for a long time!

How to Use PLUS FAN

Remote control LCD screen

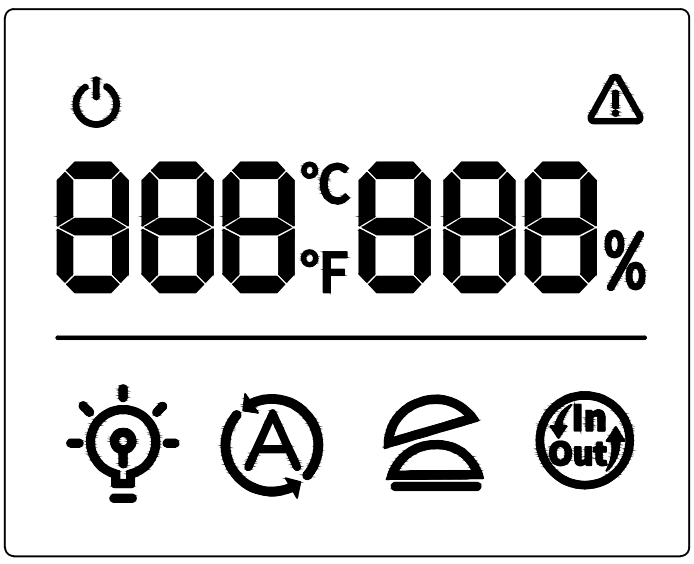

Remote control LCD icons	Corresponding functions	Button icons of remote control
	Power switch	
	AUTO	
	IN/OUT	
	LAMP	
888%	FAST	+
888%	SLOW	−
	Top cover on	
	Top cover off	
888°C °F	Switch temperature unit	+ − Press and hold to switch temperature nits
	Fault code	Fault code

Fault code	
E1	Voltage > 16V
E2	Voltage < 9V
AES	POST (motor/pcb)

Short press, unless otherwise specified.
"RES"Fault code clears upon completion of POST(Power-On Self-Test),then the system enters normal operation interface.

Special Function Explanation: Button Backlight Turn-Off and Turn-On

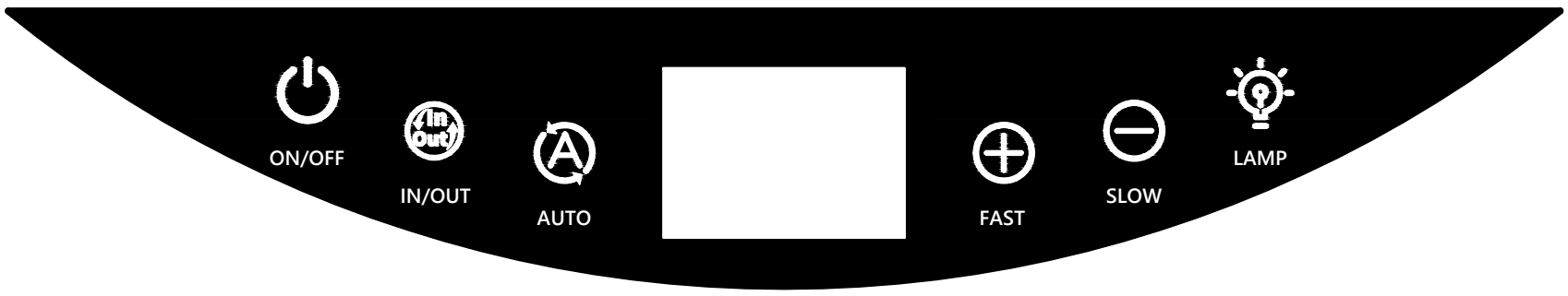

Control Panel

Control Function Description			
	Control Panel	Remote Control	Function
Turn Off	Press and hold the LAMP button for 3 seconds	Press and hold the Lighting button for 3 seconds	This will turn off the backlight of the six buttons and the LCD screen backlight on the control panel.
Turn On	Press and hold the LAMP button for 3 seconds	Press and hold the Lighting button for 3 seconds	This will turn on the backlight of the six buttons and the LCD screen backlight on the control panel.

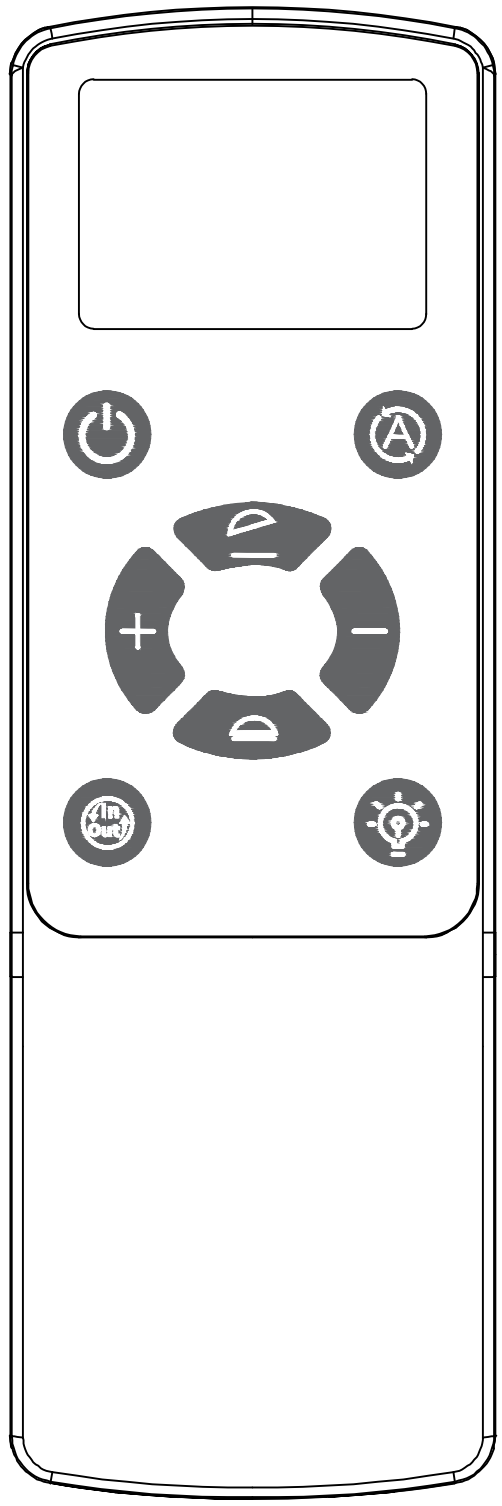

Remote Control

Press and hold the Lighting button on the remote control for 3 seconds to turn on/off the backlight of the buttons and LCD screen backlight on the control panel.

Descriptions of special functions: AUTO mode

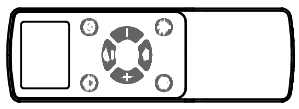 Remote control	Control panel
Short press to enter AUTO mode	Short press to enter AUTO mode
Set the temperature to: Adjustable temperature When the indoor temperature is 2 ℃ higher, the ventilating fan will automatically open the top cover and fan to exhaust air	The default setting temperature is: 26℃/79℉ When the indoor temperature is 2℃ higher than the default temperature, the ventilating fan will automatically open the top cover and fan to exhaust air outwards
Set the temperature to: Adjustable temperature When the indoor temperature is 2 ℃, lower than the set temperature, the ventilating fan will automatically close the top cover and fan	The default setting temperature is: 26℃/79℉ When the indoor temperature is 2℃lower than the default temperature, the ventilating fan will automatically close the top cover and the fan
Temperature adjustment methods for remote control setting:Press " + — " in remote control to adjust temperature in AUTO mode	The default setting temperature does not need adjustment

Descriptions of special functions: Pair code in remote control

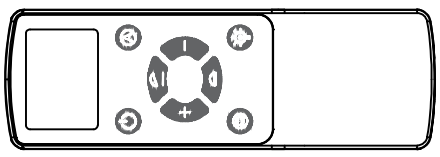	Code matching in remote control
Press In Out button in remote control for 3s within 20s after PLUS FAN is powered on	Enter the code matching state 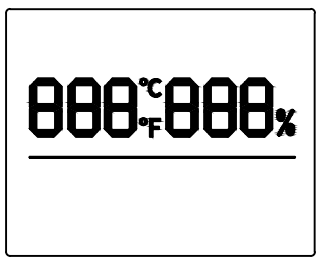
After successful code matching, the host buzzer will give out a long sound of "di……"	Success status of matching code 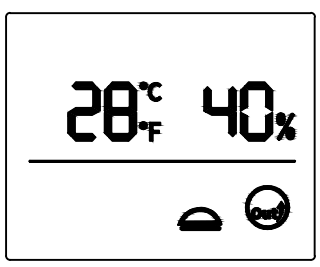

The code matching must be completed within 20 s after the ventilating fan unit is powered on (if the matching is not completed, power off and then power on again for matching once again).

Manually open/close the top cover

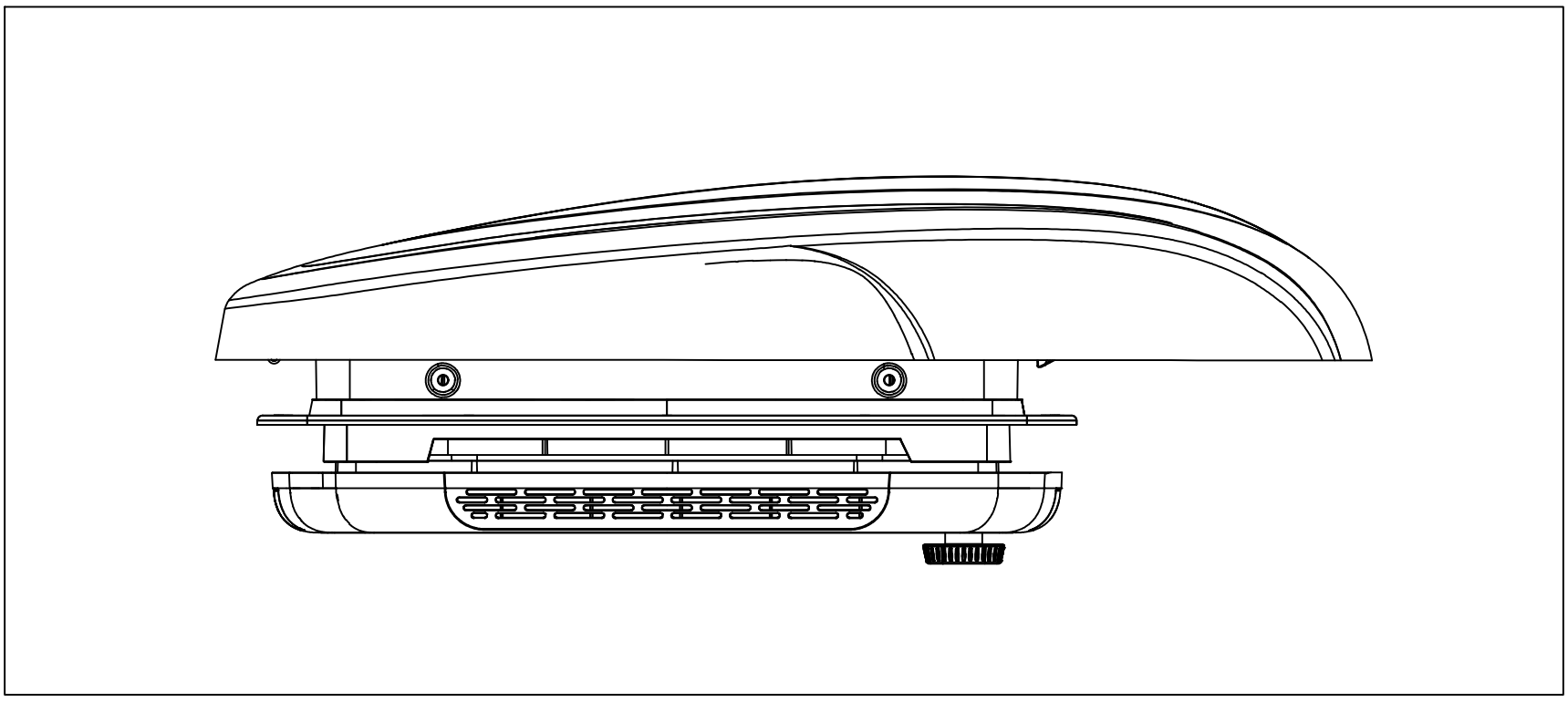

Manually turn the handle to manually open/close the top cover of the ventilating fan

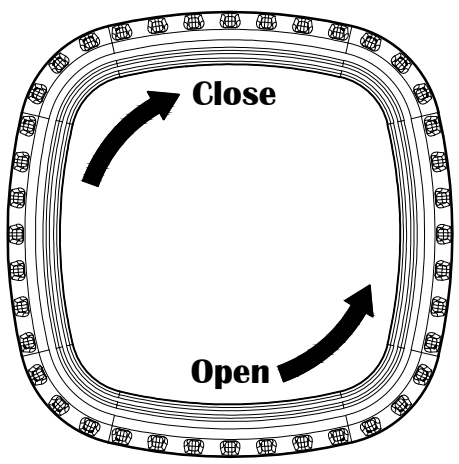

Clockwise rotation: Close the top cover
Counter-clockwise rotation: Open the top cover

Hand knob

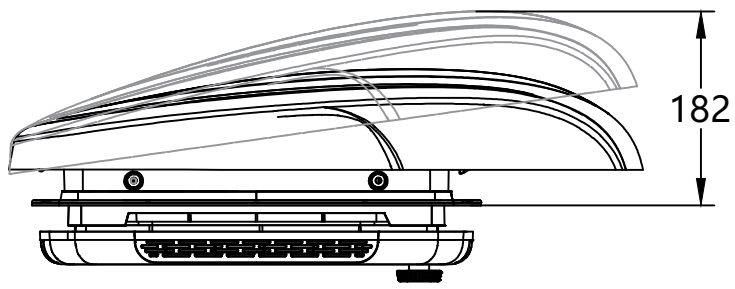

Open max. height

When manually opening the top cover, it is recommended to manually open it after powering off the ventilating fan.

When the top cover is opened or closed manually, the top cover can be opened to the upper limit or closed to stop rotating the handle to prevent internal damage.

Overall Dimensions

Unit: mm

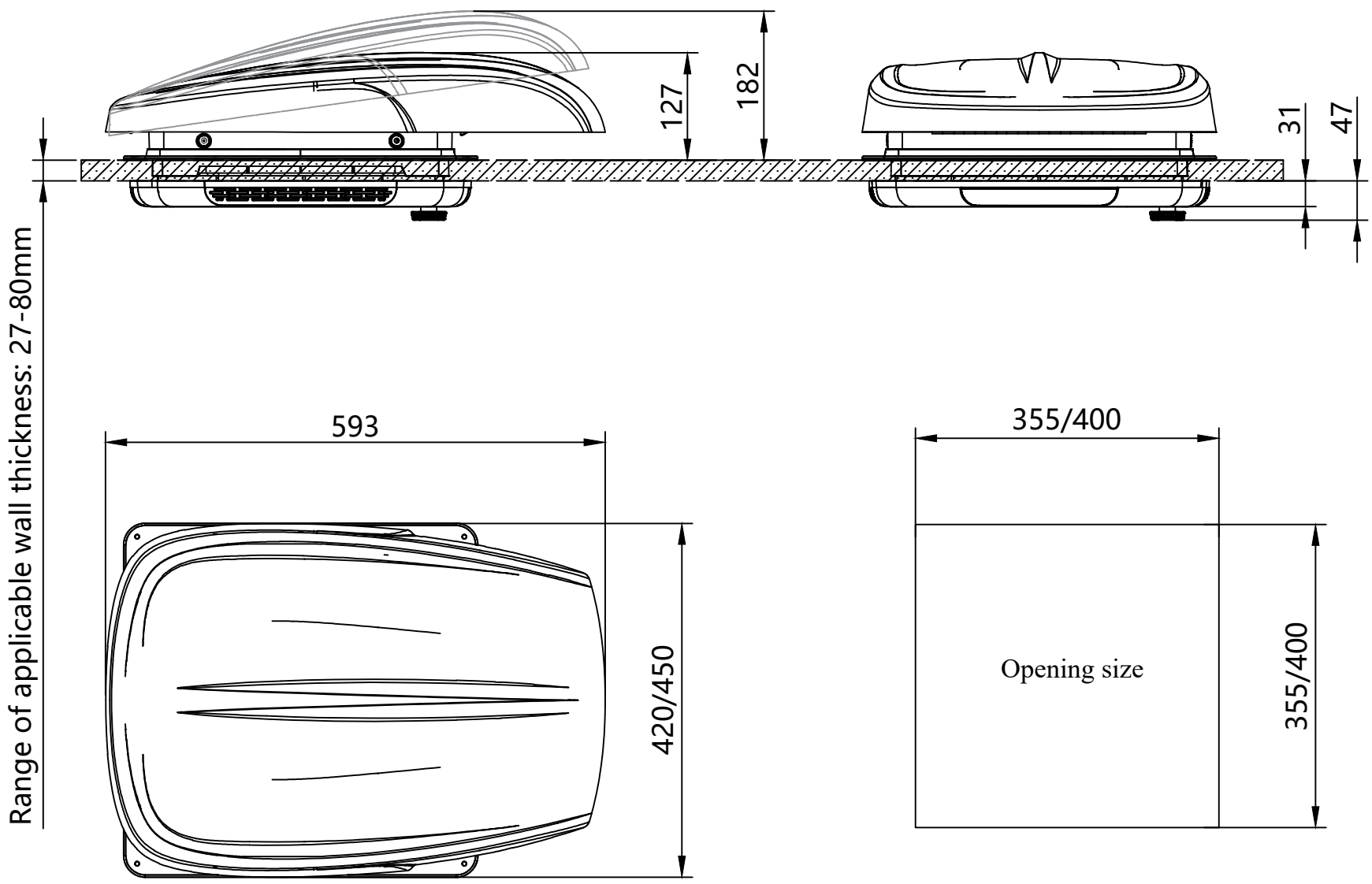

Packing List

PLUS FAN

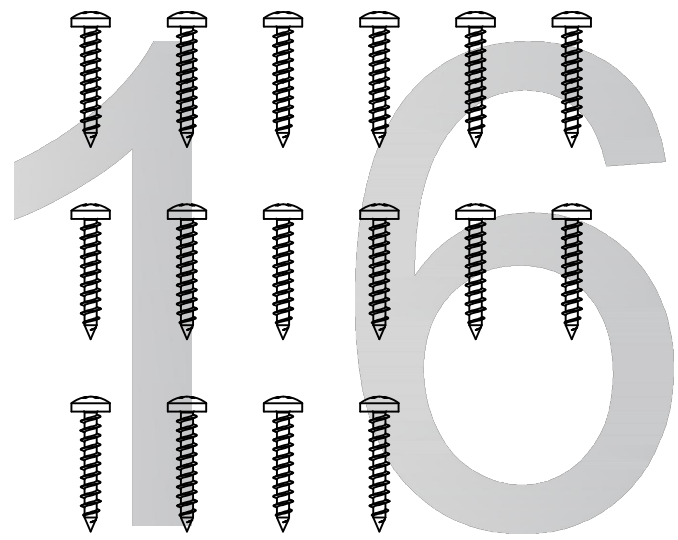

ST 4.2×25

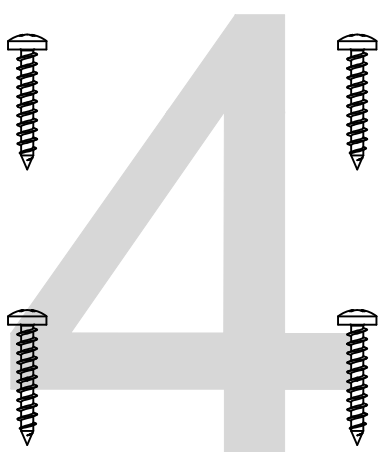

ST 3.9×40

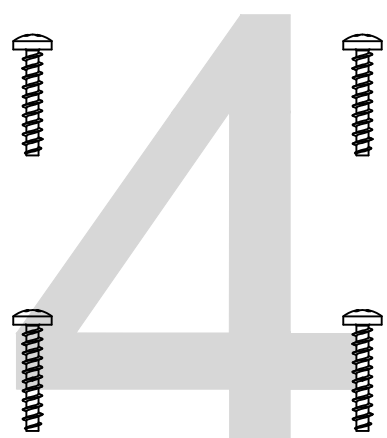

PT 4.0×12

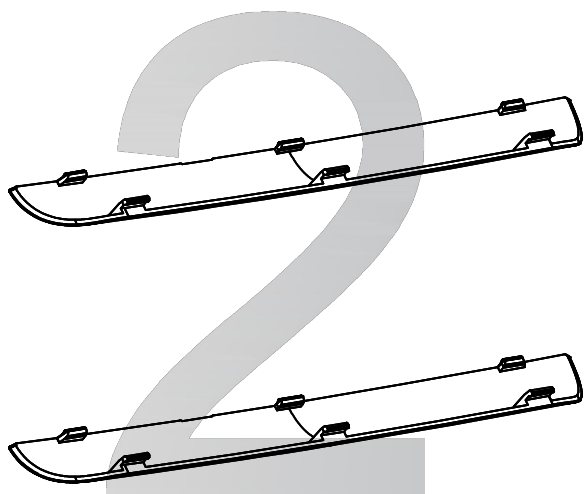

Lampshade

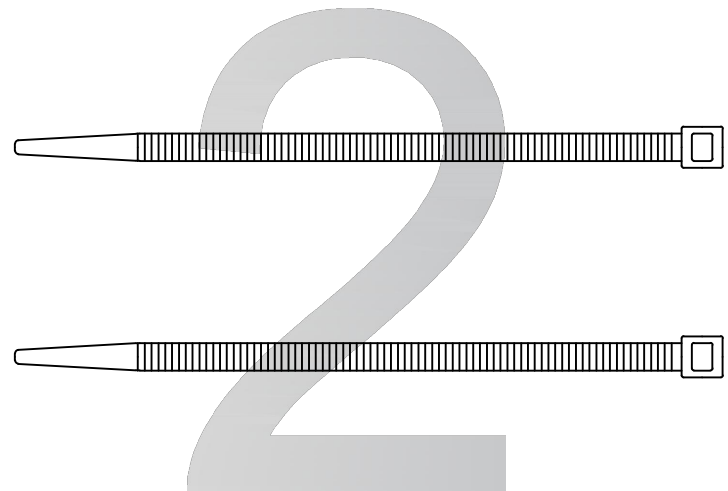

4mm Nylon cable tie

Packing List

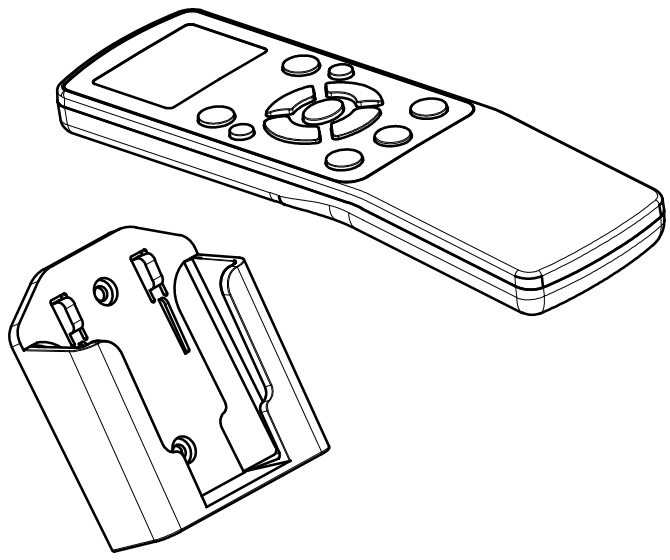

Remote control/Base

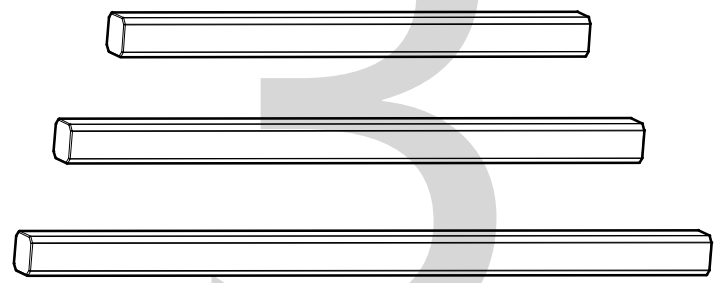

Drive square shaft
120/140/160mm

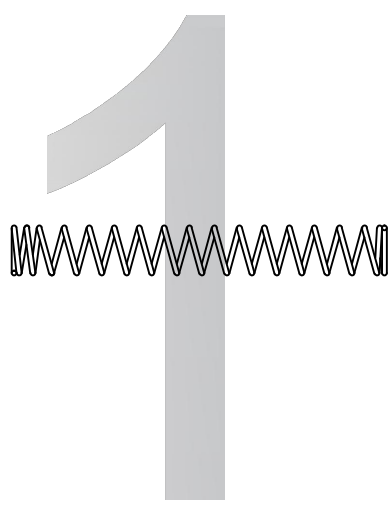

Spring

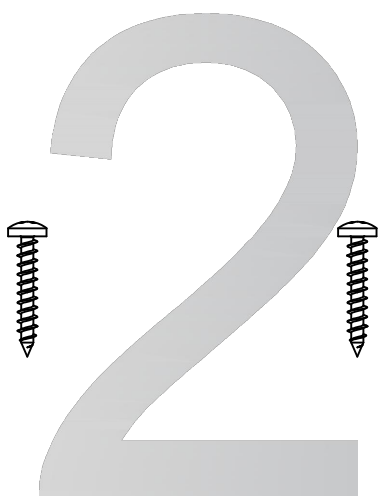

ST 3.5×13

ST 4.2×25 (for fixing the vehicle body fixing plate and the vehicle body)

ST 3.9×40 (for fixing the lower assembly of the interior trim frame to the vehicle body)

PT 4.0×12 (for fixing the upper assembly of the top cover and the fixing plate of the vehicle body)

ST 3.5×13 (for fixing the base of remote controller to the vehicle body)

Drive square shaft: 120mm suitable wall thickness: 27-47mm

Drive square shaft: 140mm suitable wall thickness: 48-67mm

Drive square shaft: 160mm suitable wall thickness: 68-80mm

Mounting of PLUS FAN

1.Open mounting holes for the PLUS FAN on the roof (strong wall with a width ≥30mm is required around the hole to ensure that the self-tap screw can be firmly nailed into that wall) according to the hole size drawing on the [Mounting Dimensions] page. Power cord ≥50mm can be optionally reserved in the opening on the left or right side of the body.

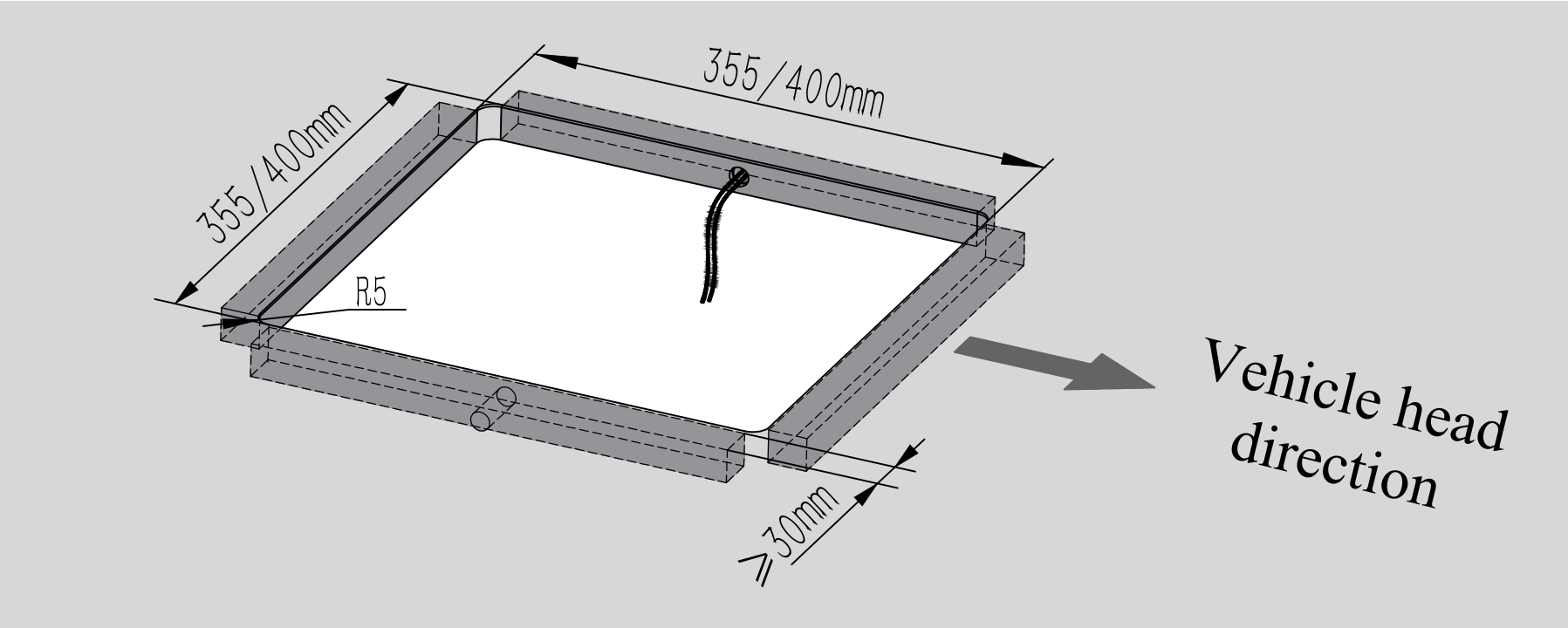

The outlet on the left side of the vehicle body is taken as an example in this manual.

2.Take out the vehicle body fixing plate from the package, and inject sealant (MS type sealant recommended) into the rubber groove of the outer ring of the vehicle body fixing plate frame. The sealant should not be too much, and any excessive glue should be cleaned up with a soft scraper.

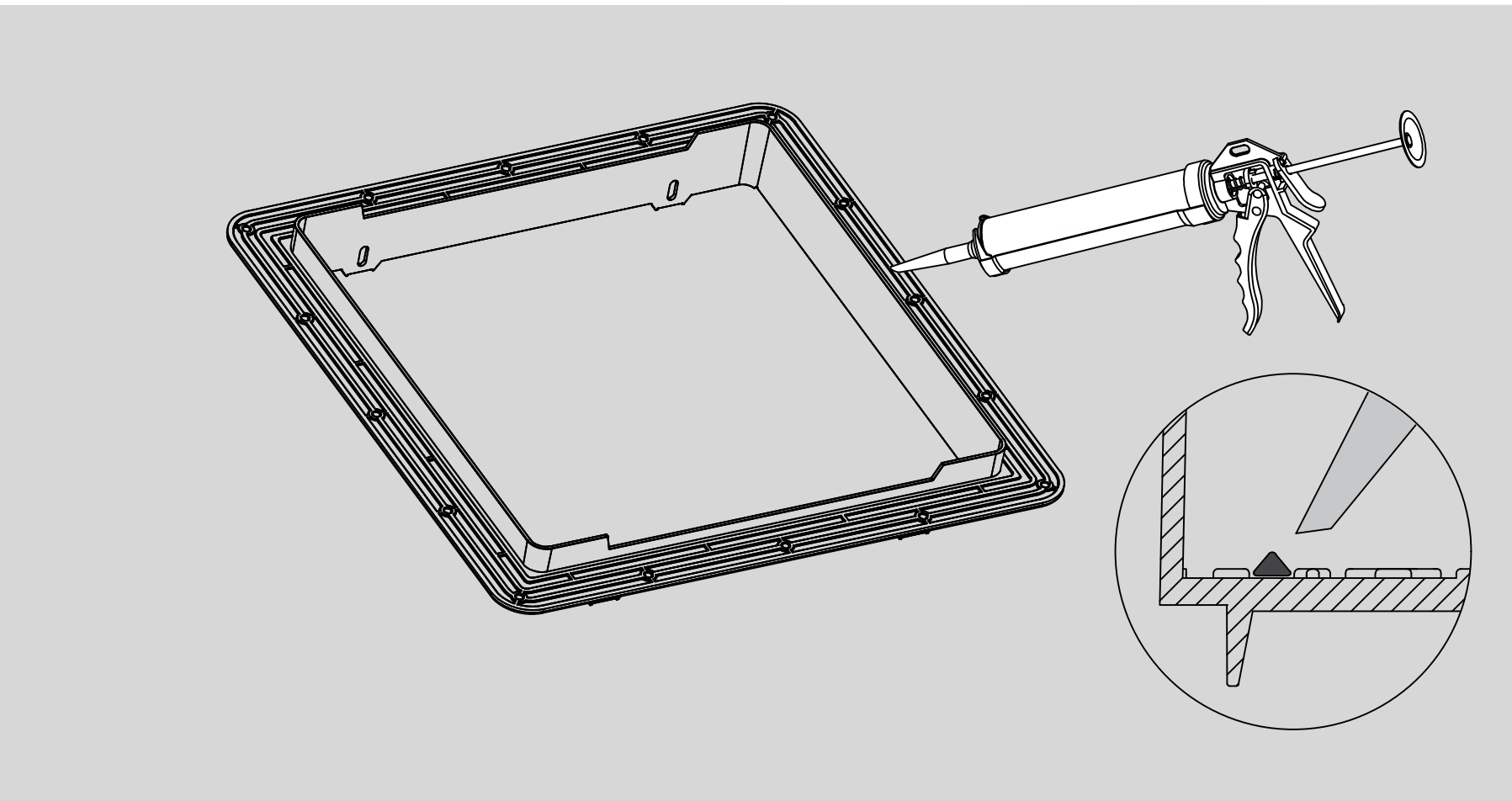

The amount of glue should be even. Do not apply too much glue.

Mounting of PLUS FAN

3.Fix the body fixing plate on the wall of the motor home with ST4.2×25 cross pan-head screws (16 pcs) outside the body. After fixing the screws, remove excessive glue around the body fixing plate, if any.

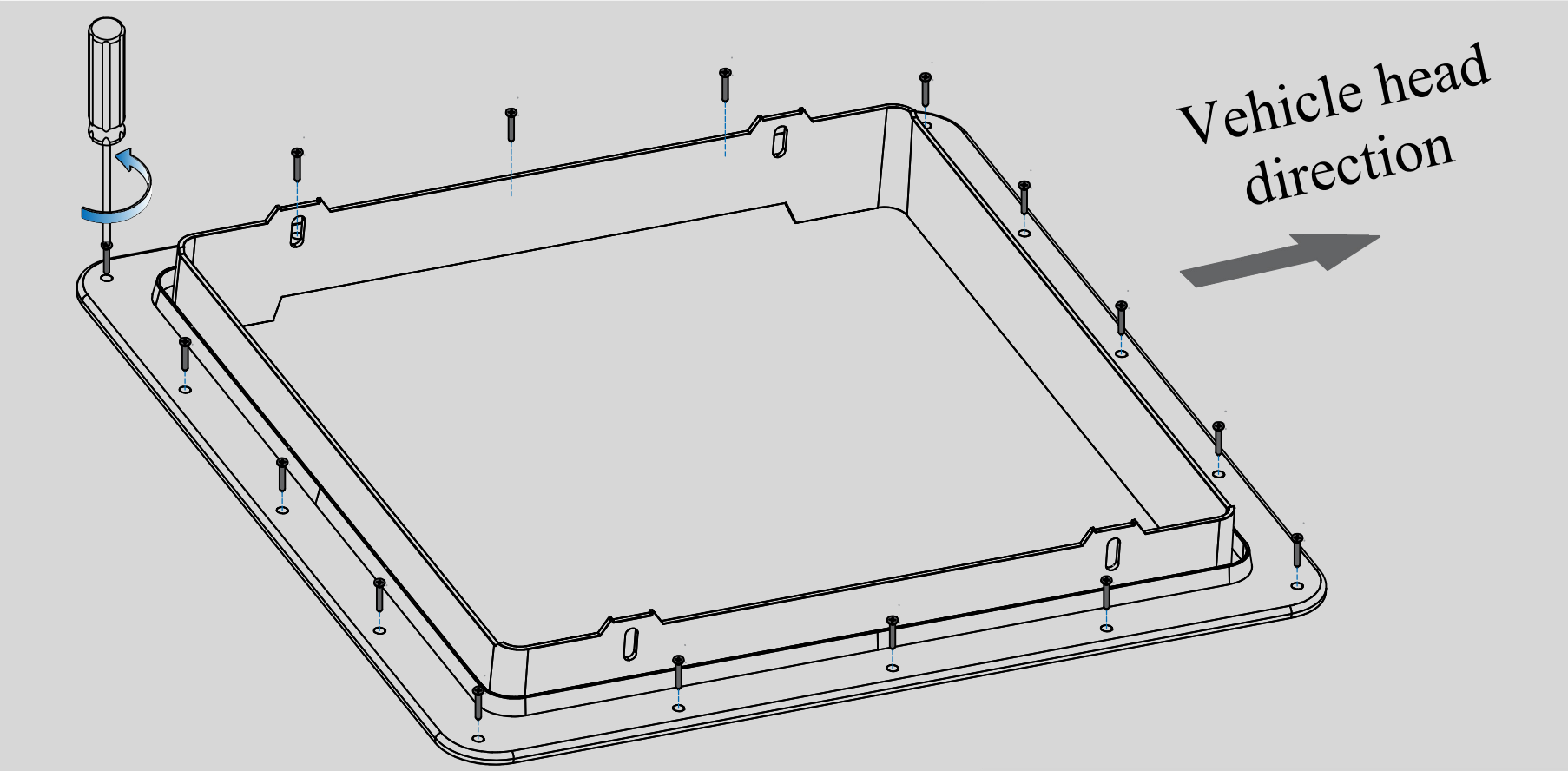

The fixing screw must be fixed firmly.

4.Remove the upper part of the PLUS FAN top cover, align it with the body fixing plate frame, and insert the upper part into the frame. After pressing, apply an appropriate amount of sealant (recommended to use MS type sealant) to (PT4.0 × 12 (4)), and then use screws to fix the upper part of the body fixing plate.

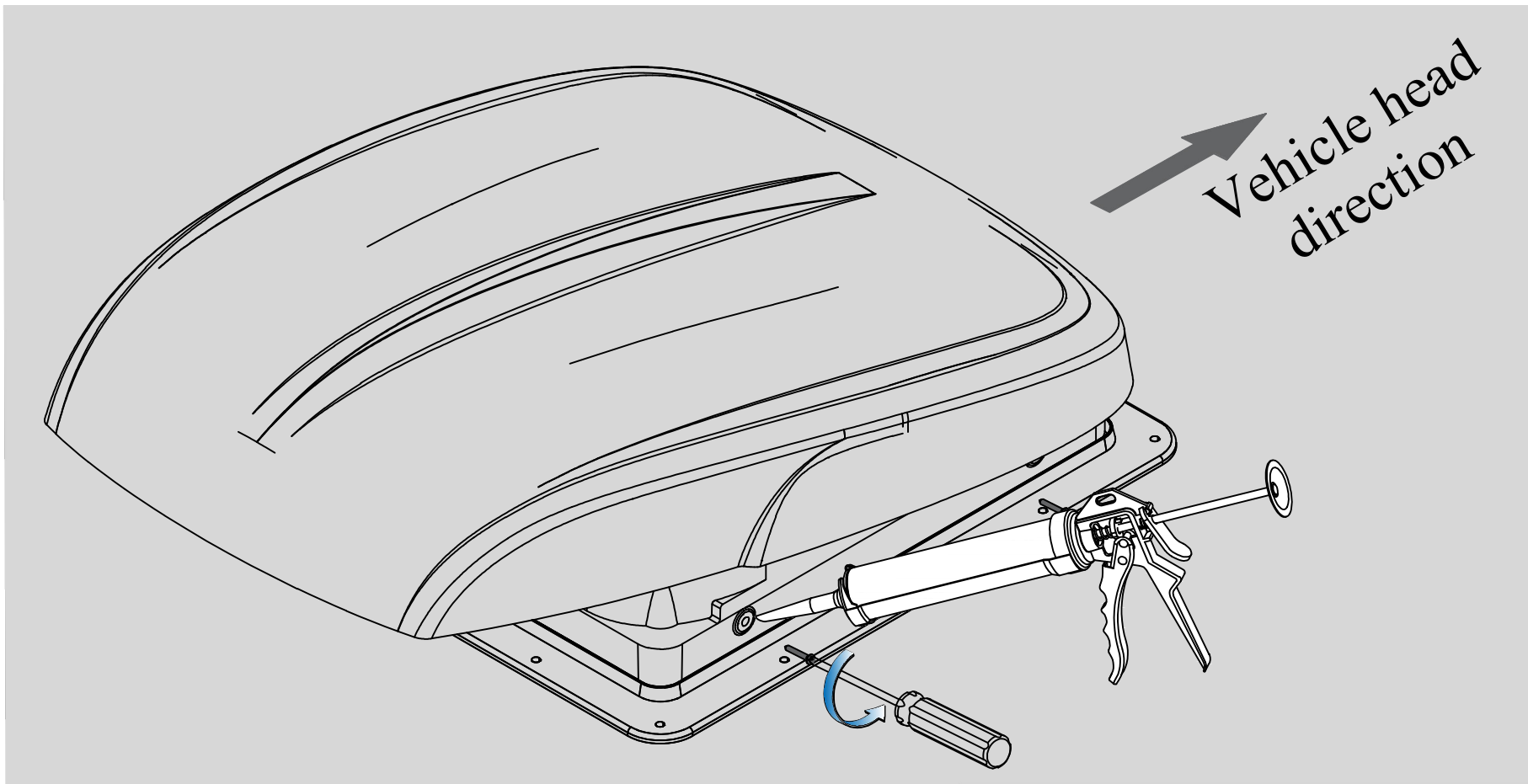

The side fixing screws must be fixed after tightening; otherwise there will be a gap between the adhesive tape between the upper assembly and the body fixing plate, probably causing water leakage. (Recommended screw torque: 0.7 N.m)

Mounting of PLUS Fan

5.Arrange the outgoing wires of the upper assembly of the top cover of PLUS FAN . There are altogether 3 kinds of wiring terminals (1#/2#/3#female ends).

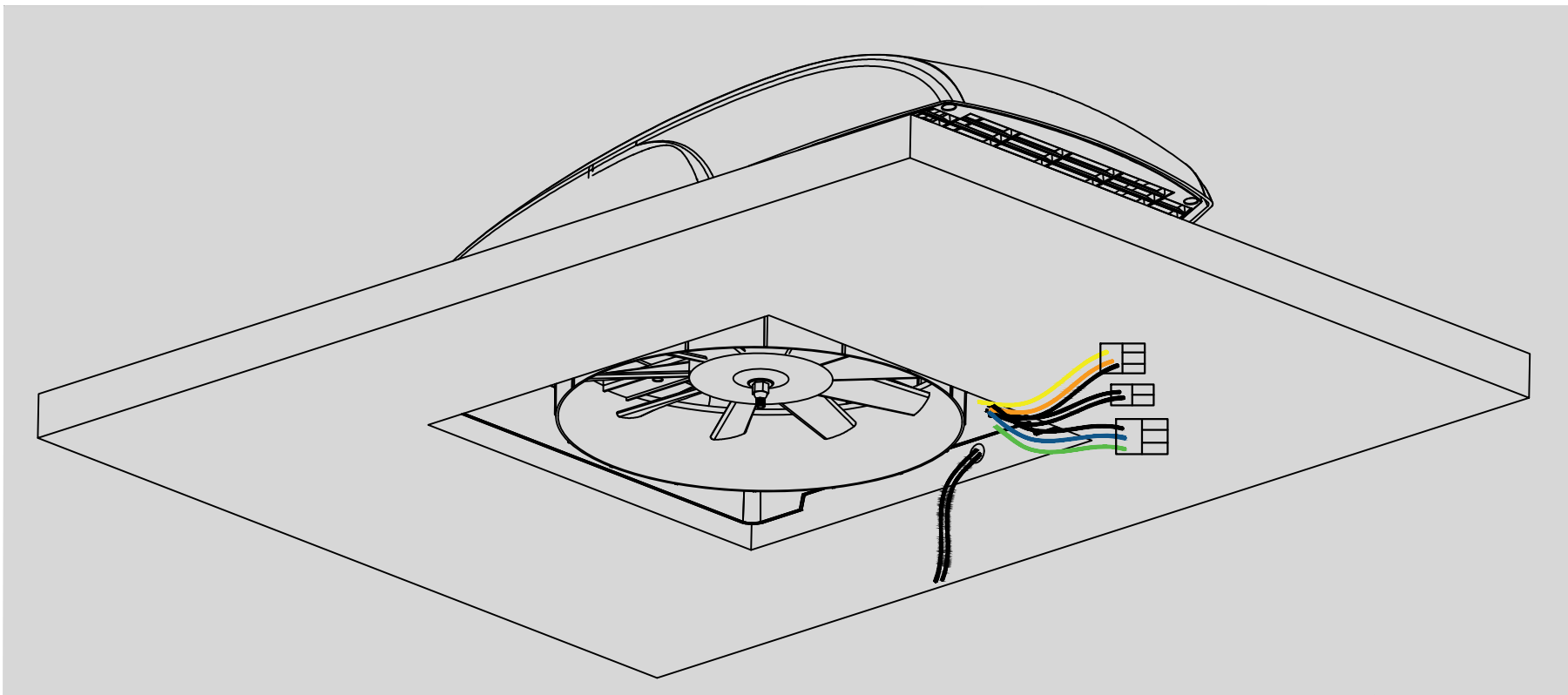

Fan motor wire: (Green, blue and yellow) 3P male end 1#;
Lifting motor wire: (Red and black) 2P male terminal 2 #,
(green, orange and yellow) 3P male terminal 3 #;
Vehicle power cord: (Red and black) bare wire;

6.Arrange the outgoing wires of the lower assembly of the interior trim frame of PLUS FAN , and respectively use 3 kinds of wiring terminals (1#/2#/3#male ends).

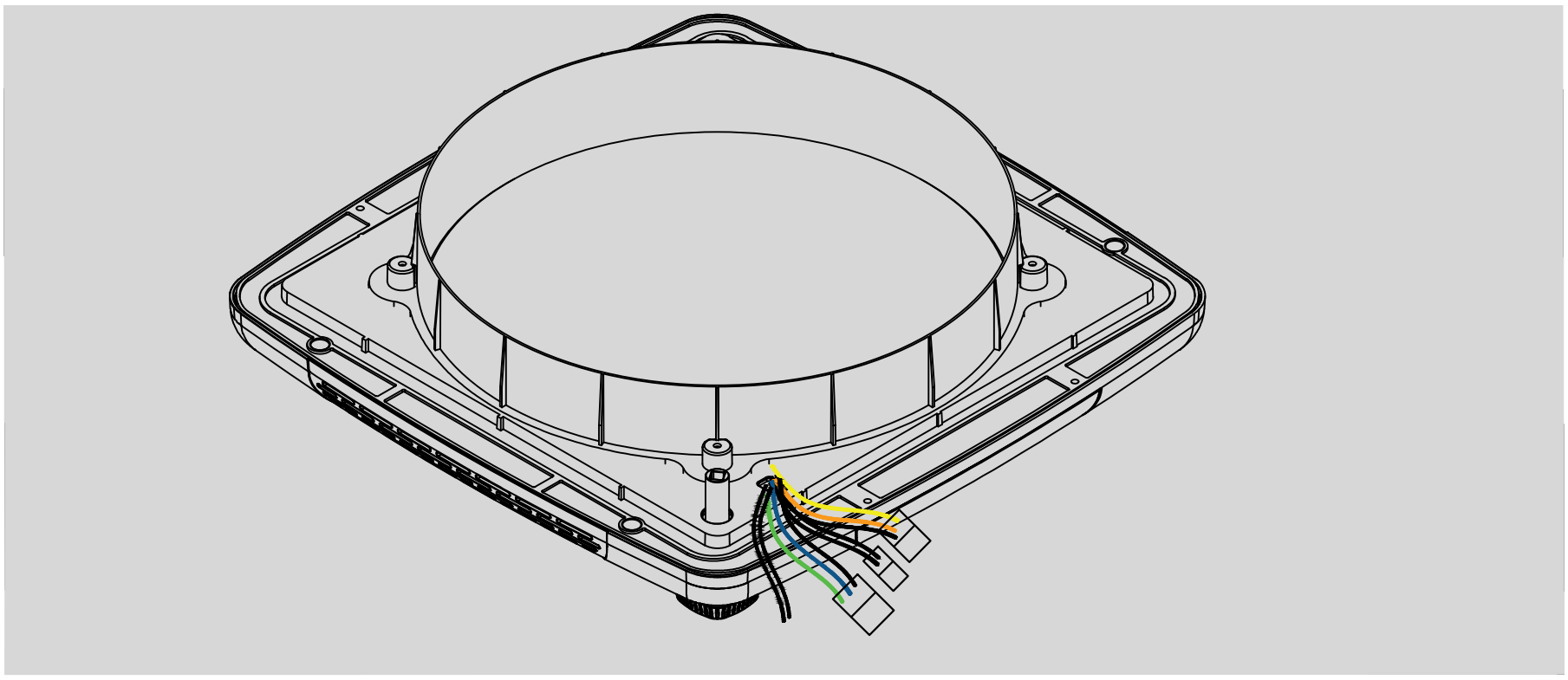

Fan motor wire: (Green, blue and yellow) 3P female end 1#;
Lifting motor wire: (Red and black) 2P female terminal 2#,
(green, orange and yellow) 3P female terminal 3#;
Input power wire of ventilating fan: (Red and black) bare wire;

The harness shall be clean, and free from damage and winding. The terminals shall be firmly connected and the pins shall be free from any damage.

Mounting of PLUS FAN

7.Connect the harness terminals (3 types) of the upper and lower assemblies of PLUS FAN respectively, and connect the anode and cathode of the power cord.

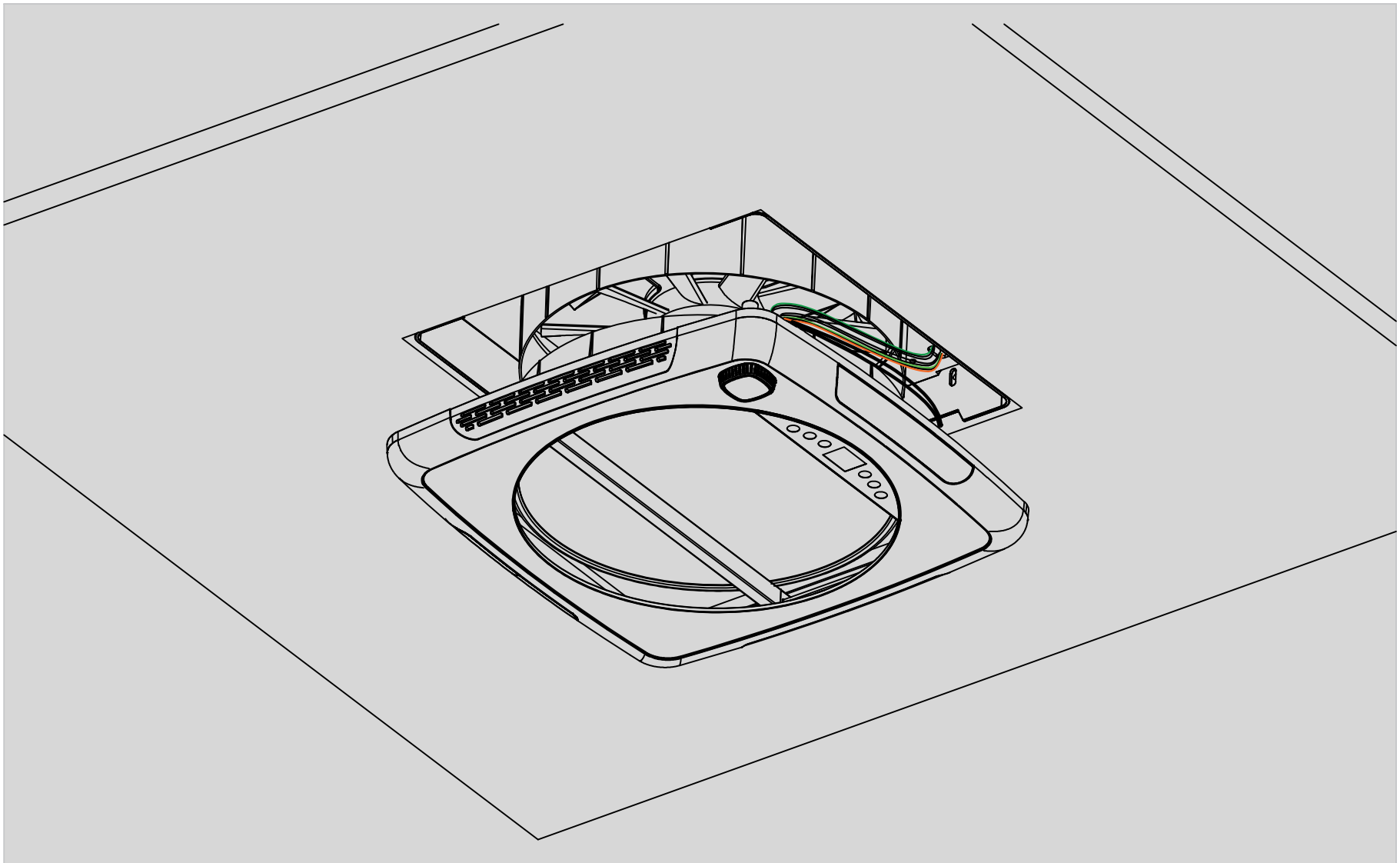

The wiring harness shall be neat, and all terminals shall be connected firmly without any insufficient or omitted connection. The wiring harness shall be aligned in color, and fixed with cable ties after wiring harness arrangement.

8.Place the spring and the transmission square shaft into the manual knob groove of the PLUS FAN in turn.

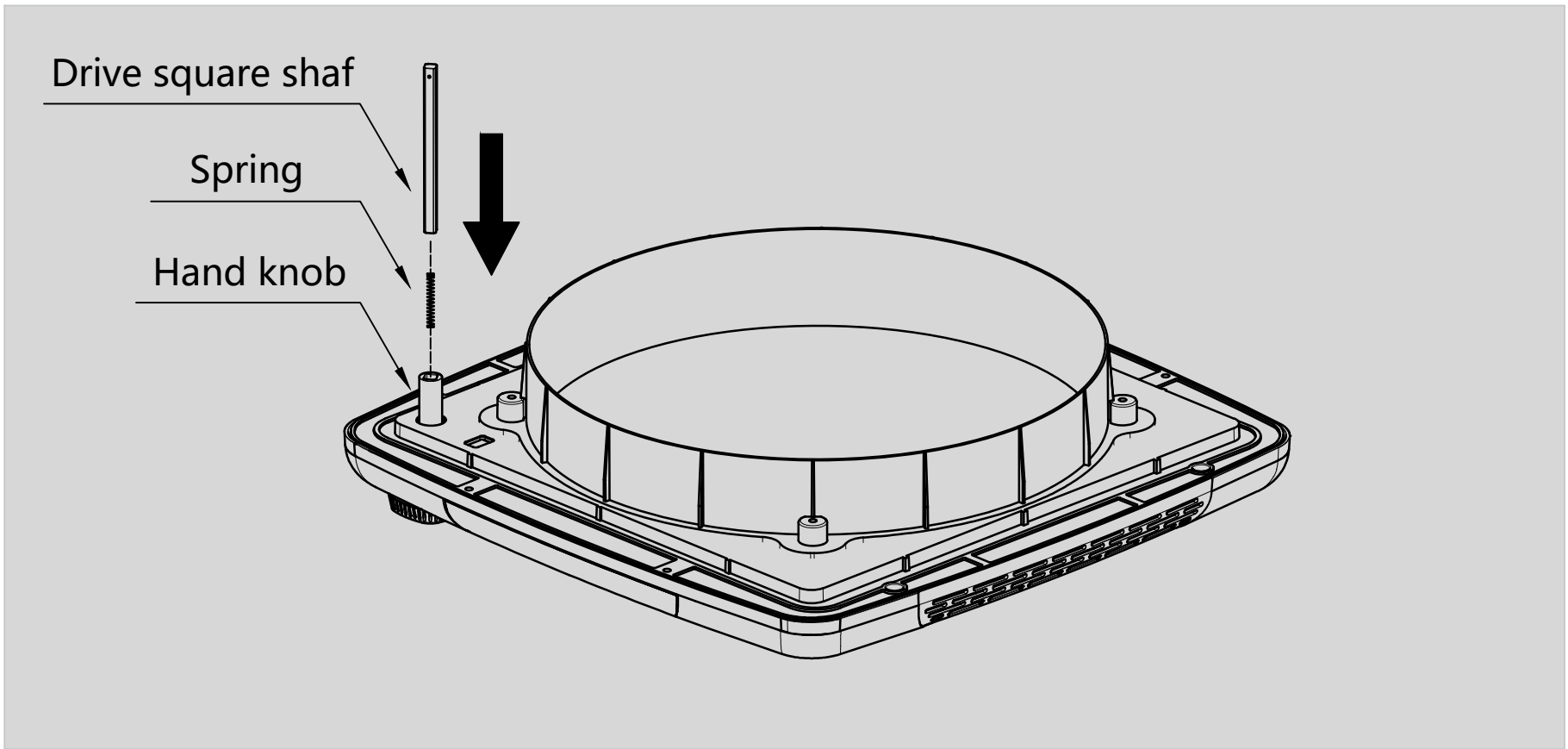

The spring shall be free from damage, the handle shall rotate flexibly without stagnation, and the square shaft shall be clean and free from oil stain and other sundries.

Mounting of PLUS FAN

9.After arranging the wire harness, align the square shaft with the corresponding position of the upper assembly of the top cover, insert the lower assembly of the interior trim frame of the PLUS FAN , and screw the ST3.9×40 cross pan-head screws (4 pcs) into the corresponding holes in turn.

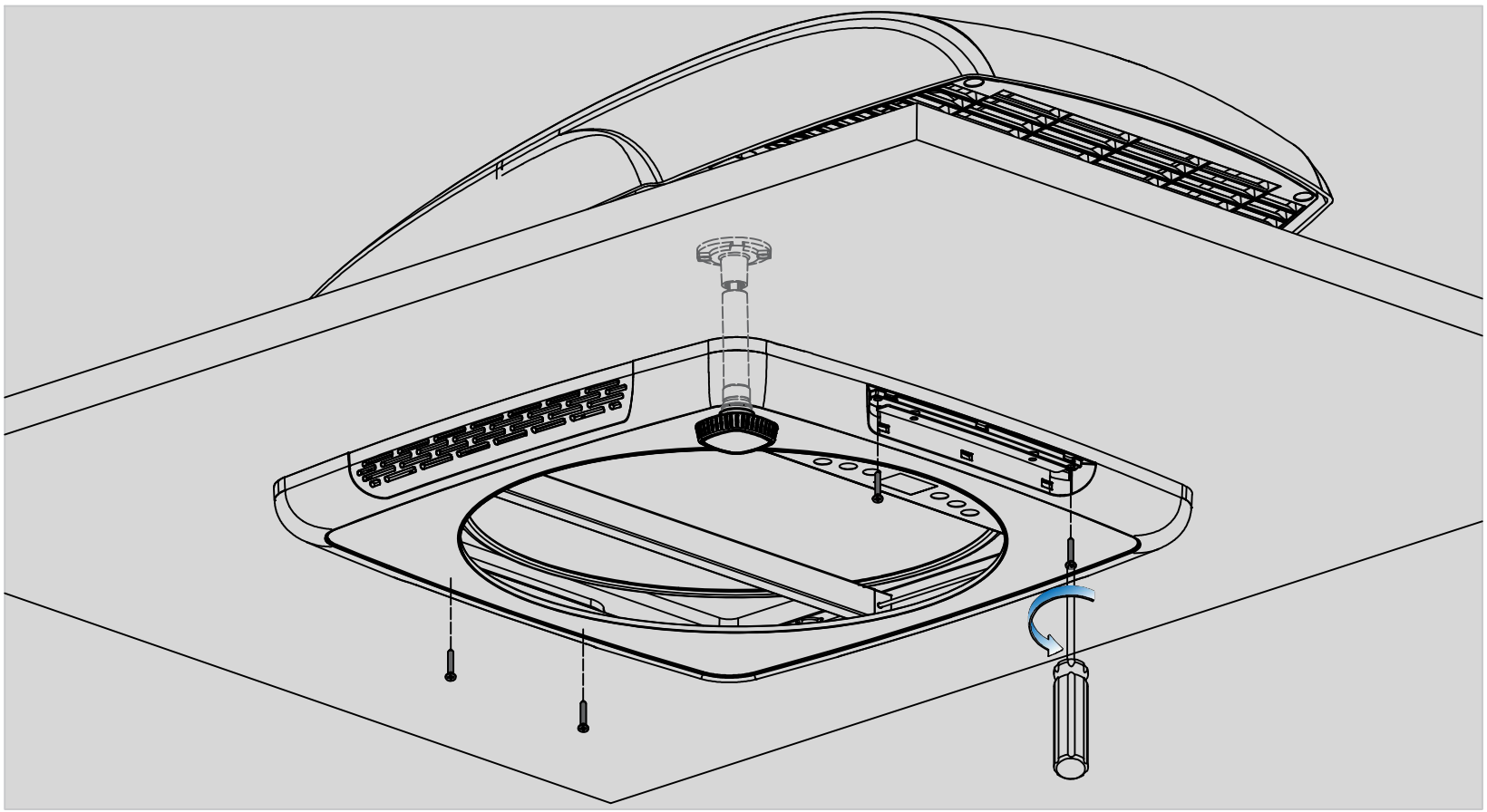

Harness shall be neat and all terminals shall be connected firmly without insufficient or omitted connection. Screws shall be fixed firmly.

10.Insert the lamp covers laterally into the corresponding slots in the lower assembly of the PLUS FAN trim frame.

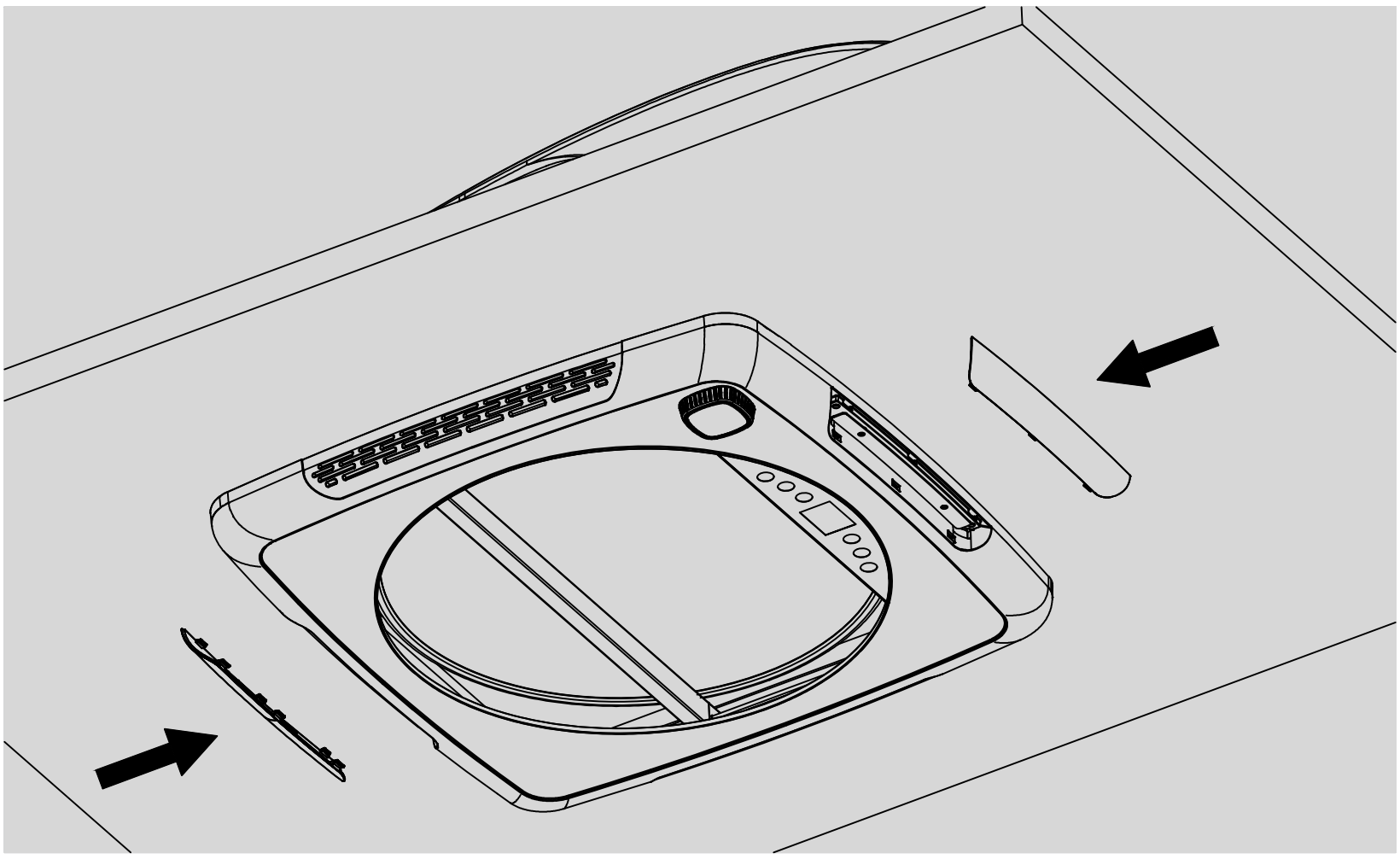

Upon inserting, the lampshade will emit three clicks, indicating that the lampshade has been clamped in place.

Mounting of PLUS FAN

11.After completing the above steps, clean the debris and dust on the PLUS FAN casing. Press the power button on the control panel to start using the device.

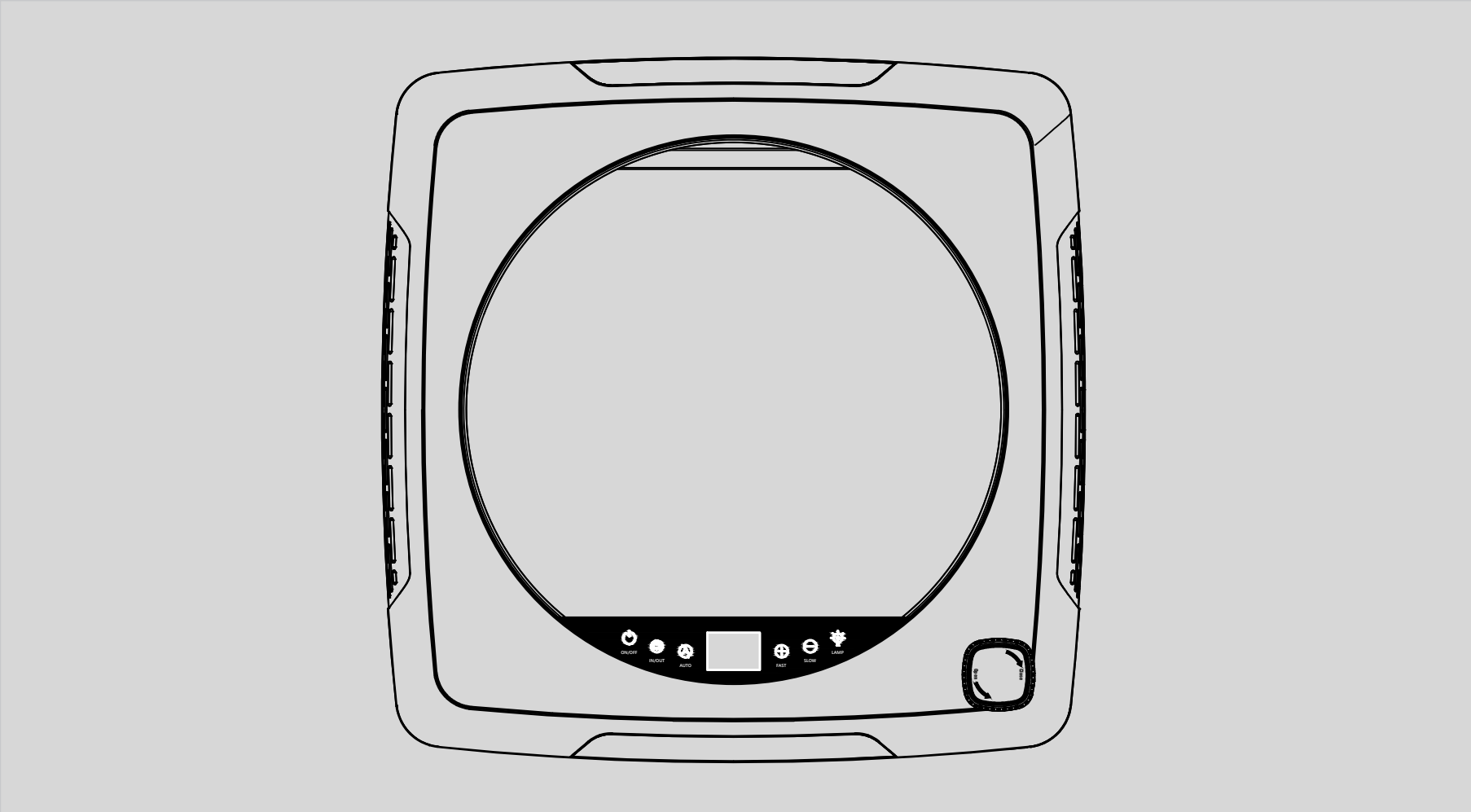

12.After powering on the device for the very first time, try each button on the control panel three times to check the functions of button backlight, lighting lamp, fan acceleration, fan deceleration, open top cover, close top cover, etc.

13.Take the remote control base and 2 ST3.5×13 cross pan-head screws, tear off the double-sided adhesive tape on the back of the remote control base, stick it in the predetermined position and fix it with screws.

Mount a total of 2 AA batteries in the remote control, which can be used after the code is successfully matched.

Please insert the remote control into the base of the remote control when it is not used.

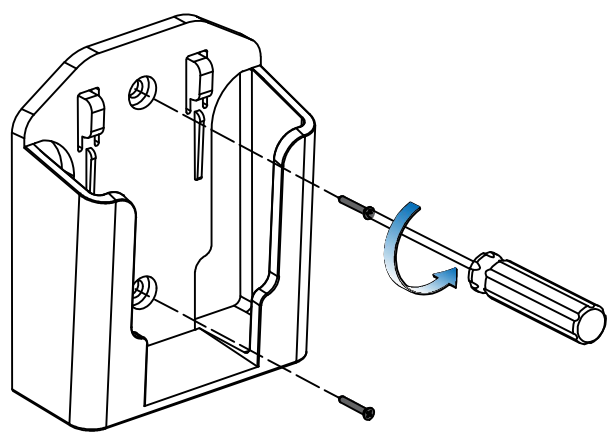

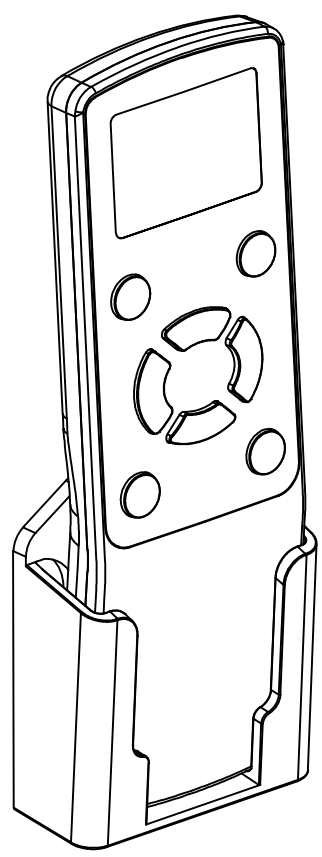

The code matching must be completed within 20 s after the ventilation fan is powered on (otherwise, cut off the power supply and re-match).

Warranty regulations

1.One year warranty is provided for the whole product.
1. Within warranty period, please contact the manufacturer or return it to the sales outlet for repair if the product is defective.
2. Within the warranty period, a fee-based repair and lifetime service will be provided in case of one of the following cases:
1) Failure to present warranty card and valid proof of purchase;
2) Alternation of invoice;
3) Failure and damage caused by accidental factors and improper use;
4) Failure and damage caused by self-repair without authorization;
5) Damage caused by using a power supply or voleage other than specified;
6) Products that have been repaired and continue to be used beyond the validity period of warranty;
4. The validity period of warranty is from the date of receiving. During the validity period of warranty, consumers can apply for repairs, returns and exchanges with the invoice and the warranty card.

Warranty card

Product name: _____
Product model: _____
Serial number: _____
Date of manufacture: _____
Customer name: _____ Contact number: _____
Customer address: _____

- - - -